Town of Greenville Standard Specifications For:

Sanitary Sewer
Water Main
Storm Sewer
Roadway and Lot Line Construction

Michael S. Siewert, P.E.
Revised December 4, 2008
Adopted December 8, 2008
M&E Proj. Number 156-905 DR

Table of Contents
Town of Greenville Standard Specifications

General

Section ..... **Page**
A. Standard Specifications 1
B. Scheduling 1

Sanitary Sewer

Section ..... **Page**
A. Approved Materials 1
B. Installation 2
C. Sanitary Sewer Testing 2
D. Observations & Record Drawings 2

Water Main

Section ..... **Page**
A. Approved Materials 3
B. Installation 3
C. Depth of Cover 4

Storm Sewer

Section ..... **Page**
A. Approved Materials 4
B. Installation 5

Roadway and Lot Line Construction

Section ..... **Page**
A. Inspections Required 5
B. Construction Schedules 6

Construction Acceptance Checklist

Detail Drawings

S.1 Typical Connection Sewer & Water
S.2 Riser

S.3 Standard Precast Sanitary Manhole
S.4 Standard Precast Drop Manhole
S.5 Inside Drop Manhole
S.6 Standard Valve & Valve Box Setting
S.7 Megalug & Blocking for Bends
S.8 Blocking for Plugs
S.9 Megalug & Blocking for Tees
S.10 Hydrant Detail
S.11 Storm Sewer Manhole
S.12 2'x3' Inlet Detail
S.13 HDPE Yard Drain
S.14 Curb & Gutter Details
S.15 Typical Trail Ramp
S.16 Typical Street Section (66'R.O.W.) Rural – Local
S.17 Typical Street Section (80'R.O.W.) Rural – Collector
S.18 Typical Street Section (66'R.O.W.) Urban – Local
S.19 Typical Street Section (80'R.O.W.) Urban – Collector
S.20 Pulverized Road Detail
S.21 Inlet Protection, Type A
S.22 Sock and Silt Fence – Installation Detail
S.23 Pond Detail
S.24 Utility Trench Repair Detail
S.25 Nonstandard Signs Installation Details
S.26 Low Speed Curve
S.27 Traffic Circle Installation Detail
S.28 Traffic Circle Signage
S.29 Median Island Installation Details and Signage (Option 1)
S.30 Median Island Installation Details and Signage (Option 1) at Intersections
S.31 Median Island Installation Details and Signage (Option 2)
S.32 Roundabout Installation Details
S.33 Roundabout Marking and Signage
S.34 Typical Lateral Shift Installation Details and Signage
S.35 Speed Hump Installation Details
S.36 Raised Crosswalk Installation Details
S.37 Spacing of Traffic Calming Devises
S.38 Mail Box Cluster Detail for Cul-de-Sacs

General

A. Standard Specifications

1. For sewer and water construction, the Town of Greenville standard specification shall be the "Standard Specifications for Sewer and Water Construction in Wisconsin", Latest Edition.
2. For street construction, the Town of Greenville standard specification shall be the "State of Wisconsin Standard Specifications for Highway and Structure Construction" Latest Edition.
3. For traffic control, the control methods shall conform to the Manual on Uniform Traffic Control Devices, including all supplements.
4. For storm water the standard specifications shall be WDNR Storm Water Management Technical Standards.

B. Scheduling

1. Once the sewer, water, and storm sewer construction is complete, the Utility Contractor shall schedule a walk through with the Sanitary District, the Town Engineer, and the Developer's Engineer. The Utility Contractor shall correct any deficiencies prior to the Street Contractor commencing work.
2. Once the street is complete through gravel, the Street Contractor shall schedule a walk through with the Sanitary District, the Utility Contractor, the Town Engineer, and the Developer's Engineer. Dependent upon responsibility, the Contractors shall correct any deficiencies prior to accepting the work.
3. Typically the Town requires the graveled street to go through one freeze/thaw cycle prior to placing curb and gutter and binder pavement. The timing of the placement of the curb and gutter and binder pavement is solely up to the discretion of the Town of Greenville.
4. Upon 60% build out the Developer is typically required to place the final pavement. The timing of the placement of the finish pavement is solely up to the discretion of the Town of Greenville.

Sanitary Sewer

A. Approved Materials

1. PVC Sewer Laterals 4" - 6" SCH-40 ASTM D 2665 or smaller
2. PVC SDR 35 – Sewer Main meeting ASTM D-3034 and F-789/PS46 for 4" - 15" or smaller
3. PVC SDR34– Sewer Main meeting ASTM F769 or F-794 For 18"-48"
4. Manholes - Precast Concrete - ASTM C-478; Integral base with precast inverts, the inverts shall be epoxy lined; rubber gasket joint ASTM C-443 or Kent-Seal

5. Castings - Neenah Foundry R-1550 with self-sealing Type "B" lid with concealed pick hole. Castings shall be R-1916-C bolt down in areas deemed to be susceptible to flooding.
6. Manhole Chimney Seal - Cretex internal manhole chimney seals are required in all new sanitary manholes or an equal approved by the Town.
7. Kent Seal butyl rubber sealant shall be 1-1/4" wide between barrel sections and ¾" wide between adjustment rings and the casting and between the adjustment rings.
8.

B. Installation

1. On mains with a depth of twelve (12) feet or greater, laterals shall be installed with a riser to facilitate a depth at the property line of ten (10) feet.
2. Depth of laterals at the property line shall be determined by the Utility District Manager or representative prior to installation.
3. At all manholes, 3/4-inch crusher run stone shall be installed from the top of the cone to the top of the casting.
4. For existing roadway crossings, backfill will be native material mechanically compacted in one (1) foot lifts if material is acceptable to Town Public Works Supervisor.
5. Manhole castings shall be tilted to match the slope of the road.
6. For new construction, manhole castings shall be set at gravel grade.
7. Where utilities are planned to be placed in an easement on the street side of the lot, the sewer lateral shall extend ten (10) feet beyond the right of way.
8. For new construction, the required chimney seals shall be delivered to the Town Garage for installation by Town employees after paving.
9. For new construction, a minimum of two (2) inches of rings to a maximum of eight (8) inches of rings shall be placed on the cone. Under no conditions shall there be more than ten (10) inches of rings placed on the cone without the approval of the Utility Superintendent.
10. Pipe lengths entering and exiting manholes shall be no shorter than 10 feet.
11. All sewers over twenty feet deep shall use SDR 26 pipe material.
12. All laterals shall have tracer wires from the main to the building.

C. Sanitary Sewer Testing

1. All new sanitary sewer installations shall be tested per the standard specifications and shall be cleaned, pressure tested and televised. A complete written report of the televising shall be prepared for review by the Sanitary District. The report shall include photographs, and color video tapes (VHS) or DVD, and shall be enclosed in a binder. The report shall be approved by the Sanitary District before the overall project will be accepted.

D. Observations & Record Drawings

1. All sanitary sewer, water main, and storm sewer construction projects will be inspected by Martenson and Eisele, Inc., unless otherwise specified. All record drawings will be prepared by Martenson and Eisele, Inc. The engineering firm preparing the plans for the construction phase, shall submit a complete reproducible plan and electronic CAD file to the Greenville Sanitary District no later than fifteen (15) days after the project proceeds. The Contractor shall work with the inspector to provide locations and elevations of all structures including but not limited to manholes, inlets, hydrants, valves and curb stops. All record drawing information shall be submitted in AUTO-CAD format and shall be on the Outagamie County coordinate system.

Water Main

A. Approved Materials

1. PVC – Main AWWA C900, DR 18 6" - 10"; Rubber Gaskets ASTM D-1869
2. Fittings - Ductile - ANSI A21.10 and AWWA C-153
   a. ANSI A21.11 and AWWA C111
   b. Cement Lined
   c. All Mechanical Joints shall have "Cor-Blue" bolts
   d. All Reducers shall be concentric
3. Valves - AWWA C509-80 Waterous with stainless steel bolts
   a. Resilient-seated gate valves - 200 psi with valve box adaptor
   b. Screw type valve box, 5-1/4" length to suit depth
4. Service Pipe – 1-1/4" 200 psi CTS SDR9 - ASTM D-2737
5. Corporation - A.Y. McDonald A4701B-22 (ball valve - type)
6. Curb Stop - A.Y. McDonald 6100-22
7. Curb Box - A.Y. McDonald 5607 for 6'-6" bury and 48" stainless steel rod
8. Tapping Saddles - Cascade CSC-2 Double bolt stainless steel
9. Fire Hydrants - Waterous Pacer WB-67 with Traffic Flange and "Cor-Blue" bolts; Flexi-Flags shall be installed on all hydrants
10. All Water Main Fittings throughout the Project shall be installed by the Contractor to include Megalugs (minimum one (1) per MJ joint)
11. All fittings, valves, valve boxes, curb boxes shall be wrapped with Poly Wrap
12. All Valves shall have valve box adaptors.

B. Installation

1. Backfill Material
   a. In new developments, backfill material may be native if material is acceptable to Town Street Superintendent. Otherwise, backfill material under future pavement shall be special backfill.

b. In existing developments, backfill shall be per Standard Specifications.
c. For existing roadway crossings, backfill will be native material mechanically compacted in one (1) foot lifts if material is acceptable to Town Street Superintendent.

2. Where utilities are planned to be placed on the street side of the lot the water lateral shall extend ten (10) feet beyond the right of way. The curb stop shall still be placed at the right-of-way.
3. Where water main changes direction by 90° a minimum of two 45°bends shall be used.

C. Depth of Cover

1. Typical minimum 7-feet.
2. In areas with no proposed finish grade is provided, the minimum shall be 8-feet below existing grade.
3. Bedding Material shall be screenings.
4. Hydrants
   a. Place 8.0 mil polyethylene bag over hydrants until acceptance by the Greenville Sanitary District #1.
   b. Pump hydrant barrels dry prior to acceptance of project.
   c. The Contractor shall install a plastic coated #10 AWG copper wire with all PVC water pipe. The wire shall be securely attached to the pipe a minimum of three times for each pipe length. The wire shall be grounded to all valves, fittings, and hydrants. Prior to final acceptance, the Contractor shall field verify actual installation by tracing for Owner.
   d. Clear stone shall be placed around base of hydrant
5. Tracer wire shall also be placed along laterals with the terminus placed along side of the curb stop.
6. Hydrant placement off of property line will be determined on a case by case basis.

Storm Sewer

A. Approved Materials

1. Storm Sewer Main
   a. Polyvinyl Chloride (PVC) SDR 35
   b. Type PS46 Polyvinyl Chloride (PVC)
   c. Polyvinyl Chloride (PVC) Ribbed Sewer Pipe
   d. Polyvinyl Chloride (PVC) Corrugated Sewer Pipe
   e. High Density Polyethylene (HDPE) Corrugated Pipe
   f. Corrugated Metal Pipe
   g. Reinforced Concrete Pipe
2. Storm Sewer Laterals

a. Polyvinyl Chloride (PVC) SDR 35 or Schedule 40

3. Inlets
   a. All inlets shall be precast inlets unless otherwise authorized by the Sanitary District
   b. Inlet castings shall be Neenah Foundry R-3039-A for mountable curb and R-3067 for Standard curb installed per the detail drawing.
   c. Vane grate castings shall be used for inlets not placed at low points in the road and shall be oriented to accept the flow.
4. Manholes
   a. Manhole castings shall be Neenah Foundry R-1550 with non rocking Type "B" lid.

B. Installation

1. Depth of Cover Limitations
   a. In areas under roadways with less than three (3) feet of cover over the pipe the pipe material must be RCP Class III or greater for pipes 12" in diameter or greater.
   b. In areas under roadways with less than two (2) feet of cover over the pipe the pipe material must be RCP Class IV or greater for pipes 12" in diameter or greater.
   c. For 8" pipe main and lateral which has between two (2) and three (3) feet of cover the pipe material must be PVC – Schedule 40 or AWWA C900.
   d. No 8" pipe will be allowed with less than two (2) feet of cover i.e. 12" concrete shall be substituted.
   e. The top of pipe will not be allowed to protrude into crushed aggregate base course.
2. All storm sewer connections shall meet spring line to spring line where practicable.
3. For existing roadway crossings, backfill will be native material mechanically compacted in one (1) foot lifts if material is acceptable to Town Street Superintendent
4. At all manholes, 3/4-inch crusher run stone shall be installed from the top of the cone (or flat top) to the top of the casting.
5. Inlet leads shall be twelve (12) inch. For inlet leads serving four or more inlets, the lead must be designed by an engineer.
6. For new construction, inlets and manholes shall be placed at gravel grade and shall be tipped to match the slope of the road.
7. For new construction a minimum of two (2) inches of rings to a maximum of eight (8) inches of rings shall be placed on the cone. Under no conditions shall there be more than ten (10) inches of rings placed on the cone or inlet without the approval of the Sanitary District.

Roadway and Lot Line Construction

A. Inspections Required

1. When roadway subgrade and/or the lot lines are completed to the appropriate elevation, the Town Engineer shall be notified. The Town Engineer will shoot the grades and inform the Contractor of any necessary corrections. The Town Engineer shall then witness a proof roll with a loaded dump truck and inform the Contractor of any necessary corrections. Upon Town Engineer's approval, Fabric and crushed aggregate base course may be placed.
2. Failure to comply with inspection requirements may result in the Town of Greenville not accepting the roadway and or the lot line grading.
3. Prior to graveling, a gradation report, from a state certified pit, must be submitted to the Town to verify that the gravel conforms to the specifications. If the gravel does not come from a state certified pit, a gradation report must be submitted to verify that the gravel conforms to the specifications.
4. When the graveling is completed to the appropriate elevation, it shall be shot by the Town Engineer. The Town Engineer will inform the Contractor of any necessary corrections.
5. All drainage ways shall have an eight (8) foot wide straw erosion mat placed in the bottom of the drainage way after seeding. All slopes greater than 5:1 shall also be matted. Erosion Mat shall be "Landlok BonTerra S2" or equal.
6. For curb and gutter, expansion joints shall be placed every 300' feet and at curve PC's and PT's per the standard specifications. All hot mixed asphalt for new roads in the Town shall be E-1. A job mix design must be submitted to the Town to verify that the mix conforms to the Specifications.

B. Construction Schedules

1. Graveling may not be performed between November 15th and May 1st of the succeeding year without prior approval of the Town of Greenville.
2. Asphaltic concrete pavement, concrete pavement, and concrete curb and gutter may not be constructed between October 15th and May 1st of the succeeding year without prior approval of the Town of Greenville. Under no circumstances shall gravel, curb and gutter, or asphaltic pavement be placed on frozen subgrade.

End of Section

Town of Greenville
Construction Acceptance Checklist

Project Name	
Date	
Project Number	
Developer	
Contractor	
Developer's Engineer	

Checklist Item	**Complete**	**Pending (Explain)**
1. Construction Complete		
2. Testing Complete		
a. Sanitary Sewer		
b. Water Main		
3. Walk Thru & Valve Check		
4. Final Punch List Completed		
5. Sewer Cleaned and Video Taped		
a. Report and Video Reviewed		
6. Safe Water Sample Received		
7. Record Drawing Okayed		
8. Received Six (6) Sets of Prints		
9. System Maps Updated		
10. Final Quantities & Costs		
11. Easements/Agreements Recorded (if any)		
12. Subgrade Shot and Approved		
13. Gravel Grade Shot and Approved		
14. Drainageways Shot and Approved		
15. Terraces Seeded and Mulched		
16. Final Walk Through Completed		
17. Lien Waivers Received		
18. Mail Box Cluster Installed		
19. Letter Recommendation Town Engineer		
20. Date Town Commission Action		
a. Conditional Approval		
b. Final Approval		

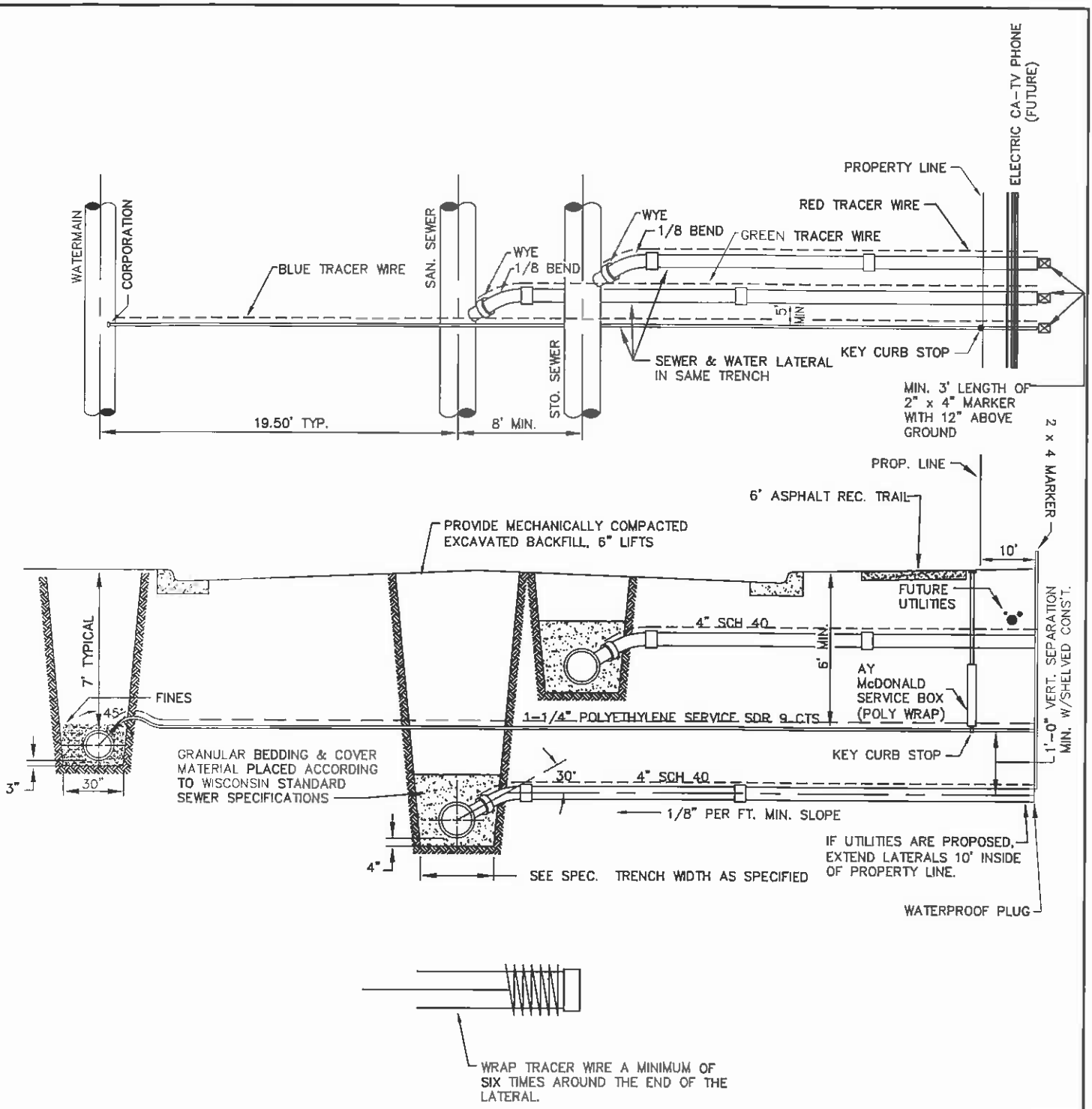

WIRE TERMINOUS DETAIL

S.1

Martenson & Eisele, Inc.

1377 Midway Road
Menasha, WI 54952
www.martenson-eisele.com
info@martenson-eisele.com
920.731.0381 1.800.236.0381

Planning
Environmental
Surveying
Engineering
Architecture

TYPICAL CONNECTION SEWER & WATER LATERAL DETAIL

FIELD BK	PAGE		DRAWN BY EAE	CHECKED	APPROVED	DRAWING NO
SCALE N.T.S.	DATE 2-2-00	NO	DATE	REVISION		
COMPUTER FILE						

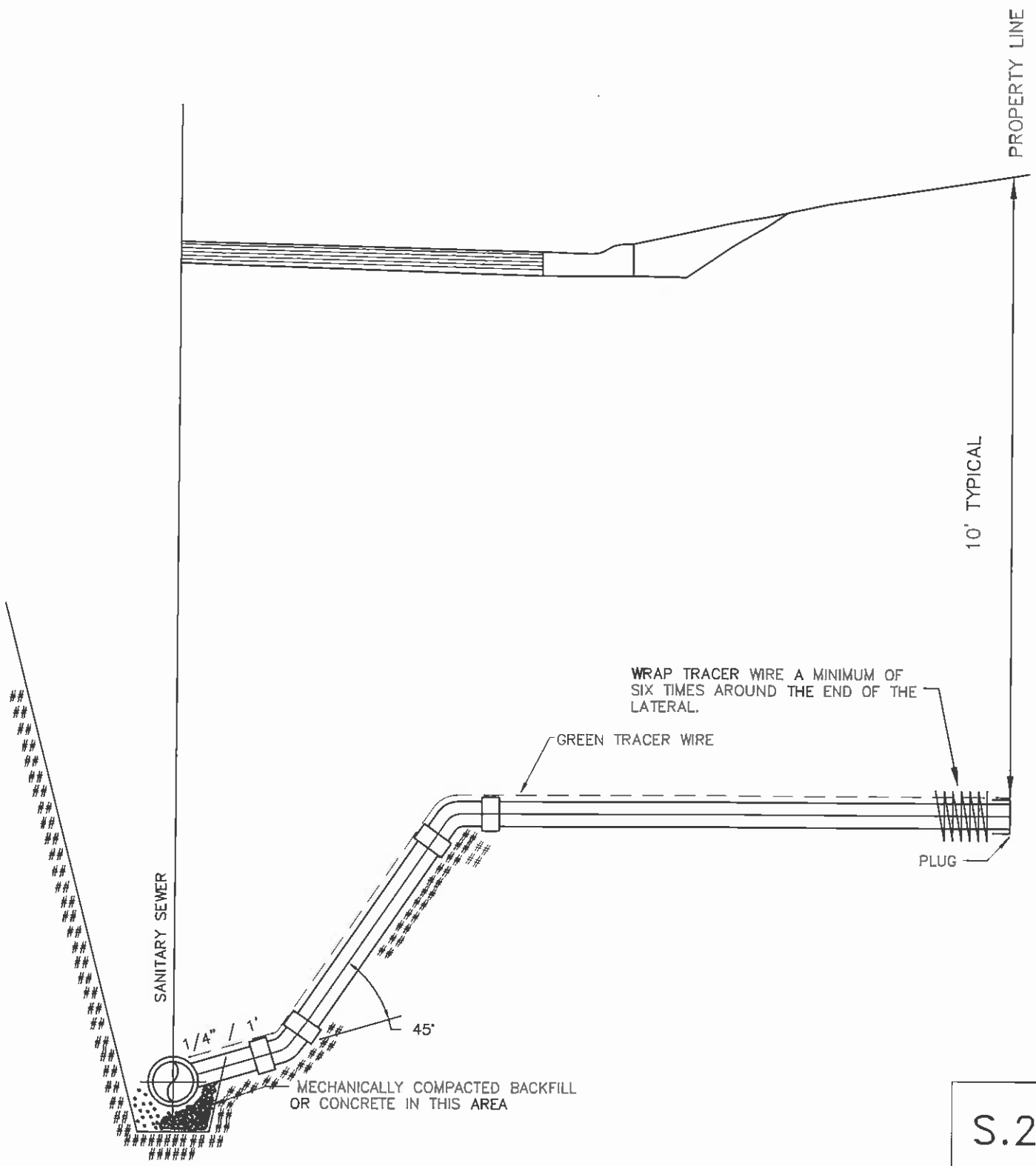

S.2

Martenson & Eisele, Inc.
1377 Midway Road
Menasha, WI 54952
www.martenson-eisele.com
info@martenson-eisele.com
920.731.0381 1.800.236.0381

Planning
Environmental
Surveying
Engineering
Architecture

RISER

FIELD BK	PAGE		DRAWN BY	CHECKED	APPROVED	DRAWING NO
			EAE			
SCALE	DATE	NO	DATE	REVISION		
N.T.S.	2-2-06					
COMPUTER FILE						
(150905drdrawings)						
RISERATMAIN.DWG						

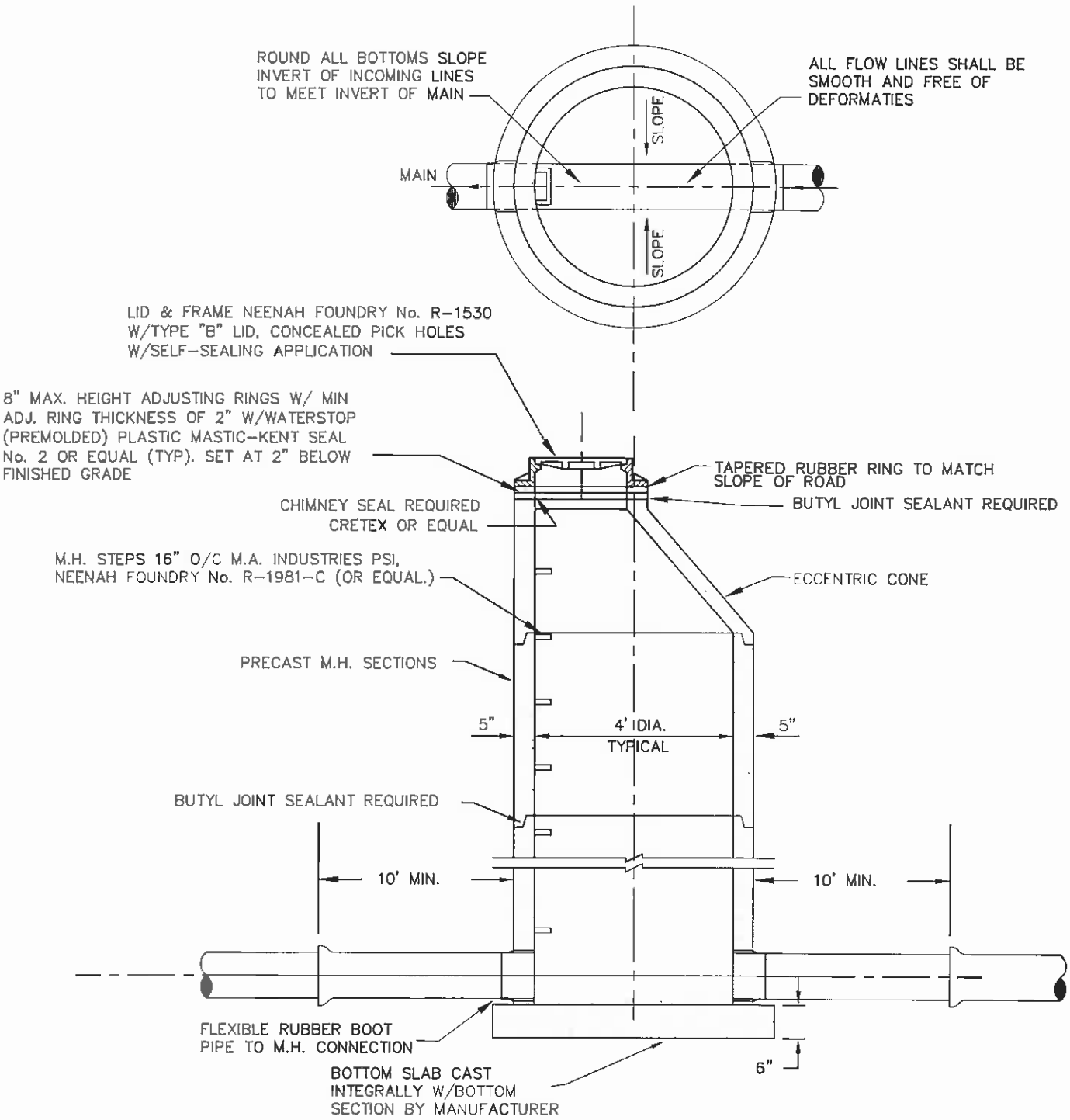

ADJUSTMENT OF CASTING SHALL USE LEAST AMOUNT OF RINGS POSSIBLE

S.3

Martenson & Eisele, Inc.

1377 Midway Road
Menasha, WI 54952
www.martenson-eisele.com
info@martenson-eisele.com
920.731.0381 1.800.236.0381

Planning
Environmental
Surveying
Engineering
Architecture

STANDARD PRECAST SANITARY MANHOLE

FIELD BK	PAGE		DRAWN BY EAE	CHECKED	APPROVED	DRAWING NO
SCALE N T S	DATE 2-2-00	NO	DATE	REVISION		
COMPUTER FILE U:\5905\drawings\ SANITARY MH.DWG						

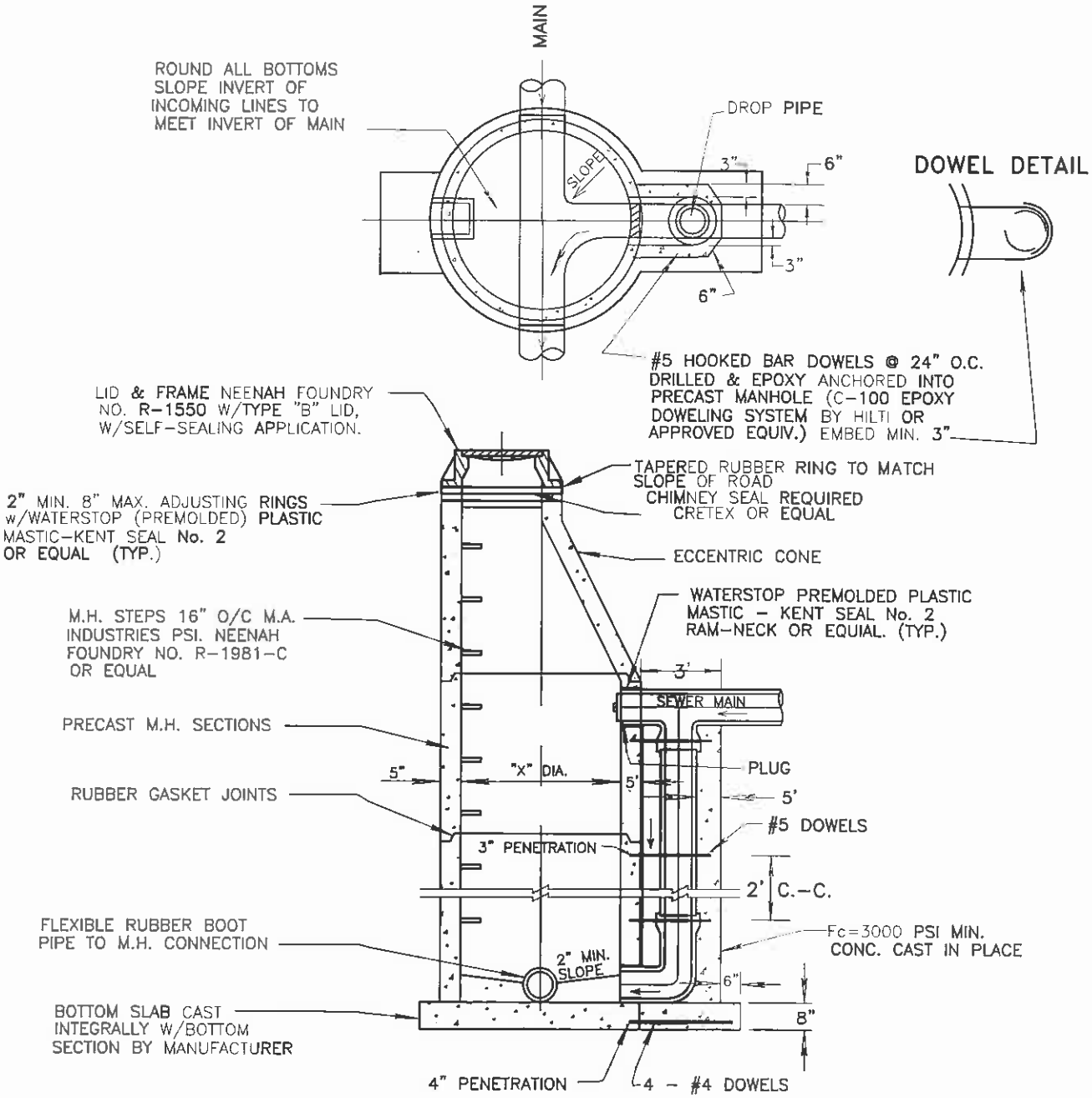

S.4

Martenson & Eisele, Inc.

1377 Midway Road
Menasha, WI 54952
www.martenson-eisele.com
info@martenson-eisele.com
920.731.0381 1.800.236.0381

Planning
Environmental
Surveying
Engineering
Architecture

STANDARD PRECAST DROP MANHOLE

FIELD BK	PAGE		DRAWN BY EAE	CHECKED	APPROVED	DRAWING NO
SCALE N.T.S.	DATE 2/2/06	NO	DATE	REVISION		
COMPUTER FILE						
PRECAST DROP MANHOLE.DWG						

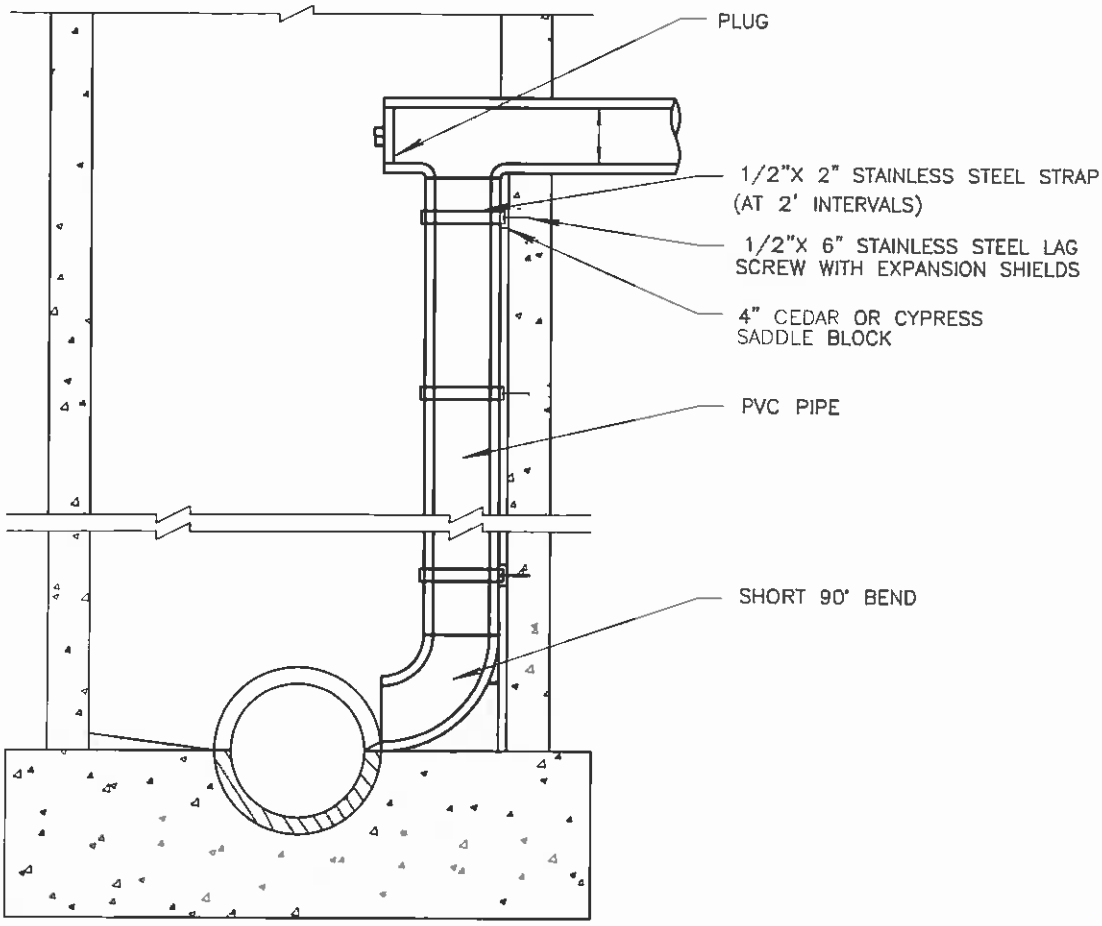

(USED ONLY WITH EXPRESS APPROVAL OF SANITARY DISTRICT)

S.5

Martenson & Eisele, Inc.

1377 Midway Road
Menasha, WI 54952
www.martenson-eisele.com
info@martenson-eisele.com
920.731.0381 1.800.236.0381

Planning
Environmental
Surveying
Engineering
Architecture

INSIDE DROP MANHOLE

FIELD BK	PAGE		DRAWN BY	CHECKED	APPROVED	DRAWING NO
			EAE			
SCALE	DATE	NO	DATE	REVISION		
N.T.S.	2-2-06					
COMPUTER FILE						
INSIDE DROP MANHOLE.DWG						

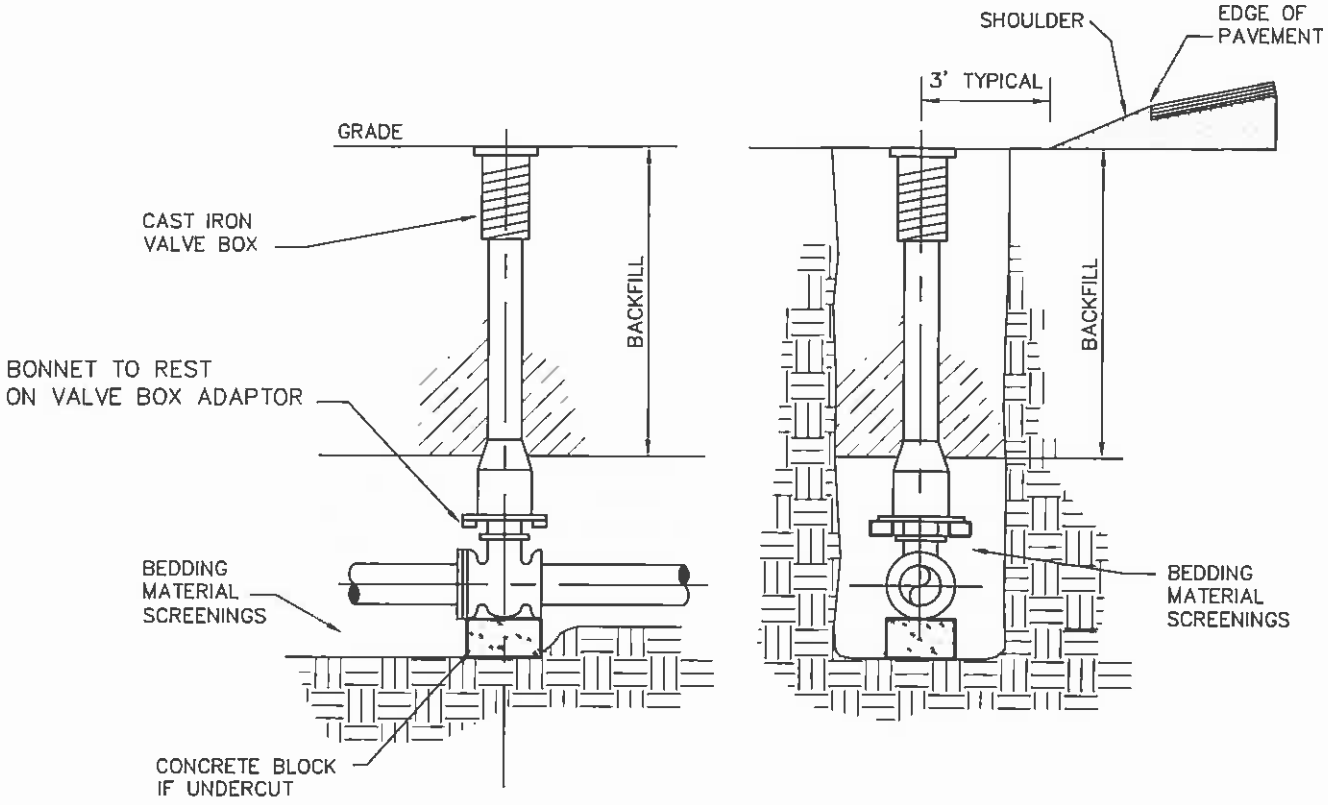

SIDE VIEW FRONT VIEW

ALL VALVES SHALL BE PLACED
OUTSIDE OF PAVEMENT.

S.6

Martenson & Eisele, Inc.
1377 Midway Road
Menasha, WI 54952
www.martenson-eisele.com
info@martenson-eisele.com
920.731.0381 1.800.236.0381
Planning
Environmental
Surveying
Engineering
Architecture

STANDARD VALVE & VALVE BOX SETTING

FIELD BK	PAGE		DRAWN BY	CHECKED	APPROVED	DRAWING NO
			EAE			
SCALE	DATE	NO	DATE	REVISION		
N.T.S.	2/2/05					
COMPUTER FILE						
VALVE & VALVE BOX						

NOTES:

1. DIMENSIONS IN TABLE ARE BASED ON A WATER PRESSURE OF 150 P.S.I. AND ON EARTH RESISTANCE OF 2 TONS PER SQ. FT.

2. DIMENSION C1–3 SHOULD BE LARGE ENOUGH TO MAKE ANGLE EQUAL TO OR LARGER THAN 45°.

3. DIMENSION A1–3 SHOULD BE AS LARGE AS POSSIBLE WITHOUT INTERFERING WITH M.J. BOLTS.

4. SHAPE OF BACK OF BUTTRESS MAY VARY AS LONG AS POUR IS AGAINST FIRM UNDISTURBED EARTH.

5. ALL IRON PIPE AND FITTINGS SHALL BE WRAPPED IN POLYETHYLENE.

6. ALL UNDERGROUND BOLTS TO BE CORE BLUE.

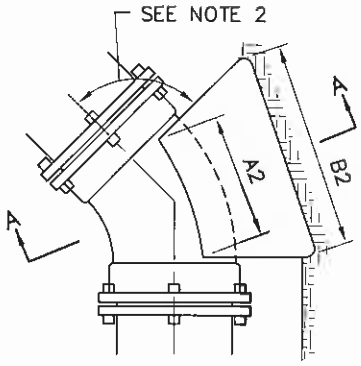

PLAN – 45° BEND

BUTTRESS DIMENSIONS				
PIPE SIZE	22–1/2° BENDS		45° BENDS	
	B1	D1	B2	D2
6"	1'–0"	1'–0"	1'–0"	1'–0"
8"	1'–0"	1'–0"	1'–4"	1'–2"
12"	1'–4"	1'–4"	1'–10"	1'–10"
16"	1'–10"	1'–8"	2'–6"	2'–4"
20"	2'–4"	2'–0"	3'–3"	2'–10"
24"	2'–10"	2'–4"	4'–0"	3'–3"
30"	3'–6"	3'–0"	5'–4"	3'–10"

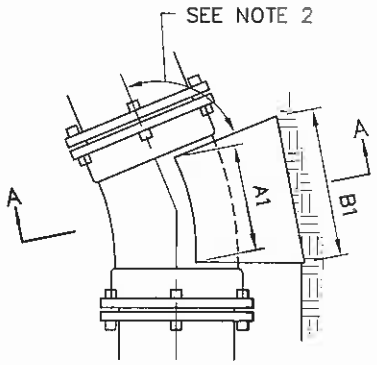

PLAN – 22–1/2° BEND

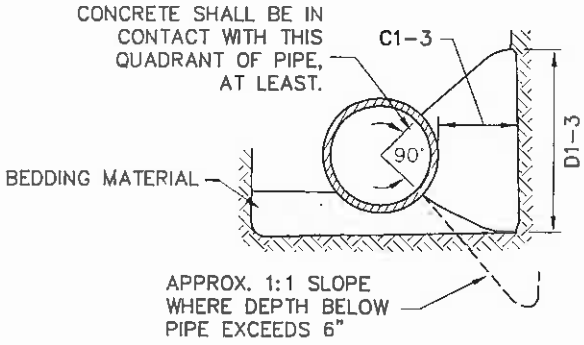

SECTION A–A

S.7

Martenson & Eisele, Inc.

1377 Midway Road
Menasha, WI 54952
www.martenson-eisele.com
info@martenson-eisele.com
920.731.0381 1.800.236.0381

Planning
Environmental
Surveying
Engineering
Architecture

MEGALUG & BLOCKING FOR BENDS

FIELD BK	PAGE		DRAWN BY EAE	CHECKED	APPROVED	DRAWING NO
SCALE N.T.S.	DATE 2-2-06	NO	DATE	REVISION		
COMPUTER FILE						

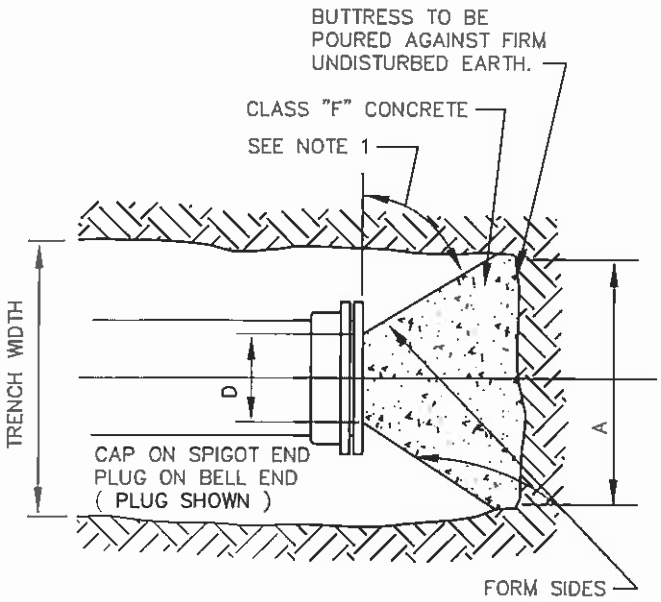

PLAN

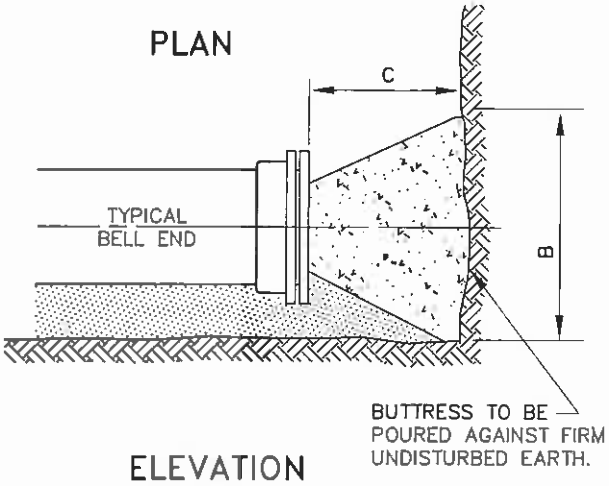

ELEVATION

BUTTRESS DIMENSIONS				
DIA.	A	B	C	D
6"	1'-6"	1'-2"	SEE NOTE 2	SEE NOTE 3
8"	2'-0"	1'-4"		
12"	2'-5"	1'-10"		
16"	3'-4"	2'-4"		
20"	4'-3"	2'-10"		
24"	5'-2"	3'-4"		
30"	6'-9"	4'-0"		

NOTES:

1. DIMENSIONS IN TABLE ARE BASED ON A WATER PRESSURE OF 150 P.S.I. AND ON EARTH RESISTANCE OF 2 TONS PER SQ. FT.

2. DIMENSION C SHOULD BE LARGE ENOUGH TO MAKE ANGLE EQUAL TO OR LARGER THAN 45°.

3. DIMENSION D SHOULD BE AS LARGE AS POSSIBLE WITHOUT INTERFERING WITH M.J. BOLTS.

4. SHAPE OF BACK OF BUTTRESS MAY VARY AS LONG AS POUR IS AGAINST FIRM UNDISTURBED EARTH.

5. ALL IRON PIPE AND FITTINGS SHALL BE WRAPPED IN POLYETHYLENE.

6. ALL UNDERGROUND BOLTS TO BE CORE BLUE.

S.8

Martenson & Eisele, Inc.

1377 Midway Road
Menasha, WI 54952
www.martenson-eisele.com
info@martenson-eisele.com
920.731.0381 1.800.236.0381

Planning
Environmental
Surveying
Engineering
Architecture

BLOCKING FOR PLUGS

FIELD BK	PAGE		DRAWN BY EAE	CHECKED	APPROVED	DRAWING NO
SCALE N.T.S.	DATE 2-2-05	NO	DATE	REVISION		
COMPUTER FILE						

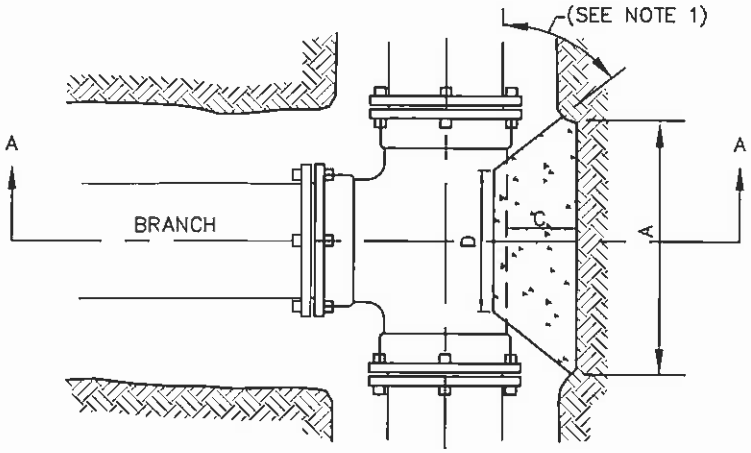

PLAN

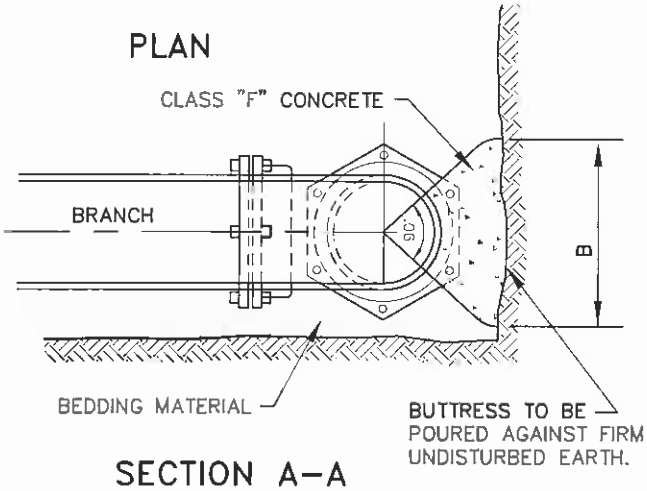

SECTION A–A

BUTTRESS DIMENSIONS				
B.D.	A	B	C	D
6"	1'–3"	1'–0"	SEE NOTE 1	SEE NOTE 2
8"	1'–6"	1'–4"		
12"	2'–3"	2'–0"		
16"	3'–2"	2'–6"		
20"	4'–0"	3'–0"		
24"	5'–3"	3'–4"		
30"	6'–6"	4'–3"		

B.D. = BRANCH DIAMETER

NOTES:

1. DIMENSION "C" SHOULD BE LARGE ENOUGH TO MAKE ANGLE EQUAL TO OR LARGER THAN 45°.

2. DIMENSION "D" EQUALS APPROX. I.D. OF PIPE LESS 2". AN EFFORT SHOULD BE MADE TO PREVENT THE CONCRETE FROM COVERING THE M.J. BOLTS.

3. WHERE BUTTRESSES ARE NOT POSSIBLE BECAUSE OF POOR SOIL CONDITIONS OR LACK OF ROOM, STRAPPING SHALL BE PERMITTED.

4. DIMENSIONS IN TABLE ARE BASED ON A WATER PRESSURE OF 150 P.S.I. AND ON EARTH RESISTANCE OF 2 TONS PER SQ. FT.

5. ALL UNDERGROUND BOLTS TO BE CORE BLUE.

S.9

Martenson & Eisele, Inc.

1377 Midway Road
Menasha, WI 54952
www.martenson-eisele.com
info@martenson-eisele.com
920.731.0381 1.800.236.0381

Planning
Environmental
Surveying
Engineering
Architecture

MEGALUG & BLOCKING FOR TEES

FIELD BK	PAGE		DRAWN BY EAE	CHECKED	APPROVED	DRAWING NO
SCALE N.T.S.	DATE 2-9-00	NO	DATE	REVISION		
COMPUTER FILE						

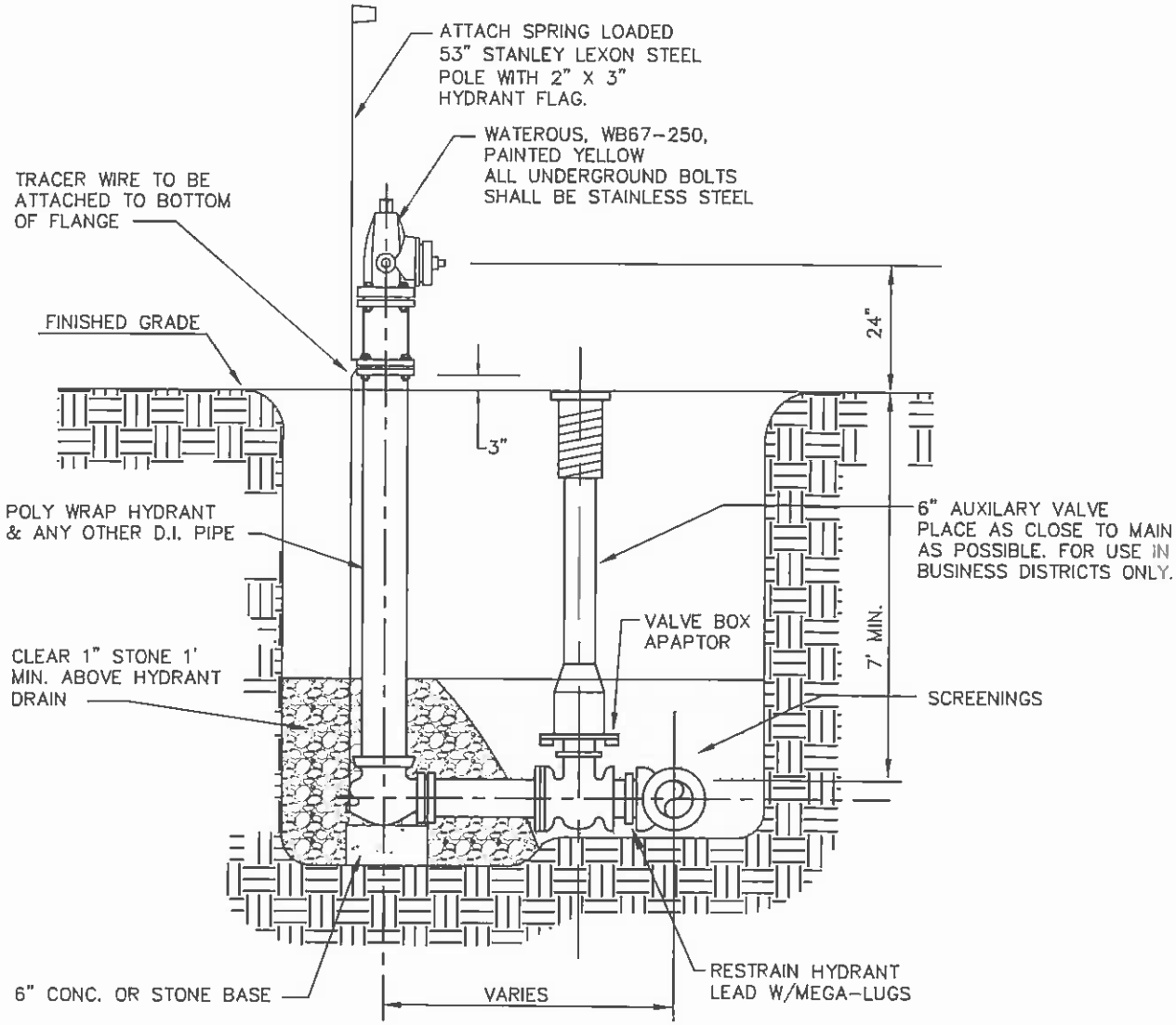

S.10

Martenson & Eisele, Inc.

1377 Midway Road
Menasha, WI 54952
www.martenson-eisele.com
info@martenson-eisele.com
920.731.0381 1.800.236.0381

Planning
Environmental
Surveying
Engineering
Architecture

HYDRANT DETAIL

FIELD BK	PAGE		DRAWN BY	CHECKED	APPROVED	DRAWING NO
			EAE			
SCALE	DATE	NO	DATE	REVISION		
N.T.S.	2/2/05					
COMPUTER FILE						
HYDRANT D.DWG						

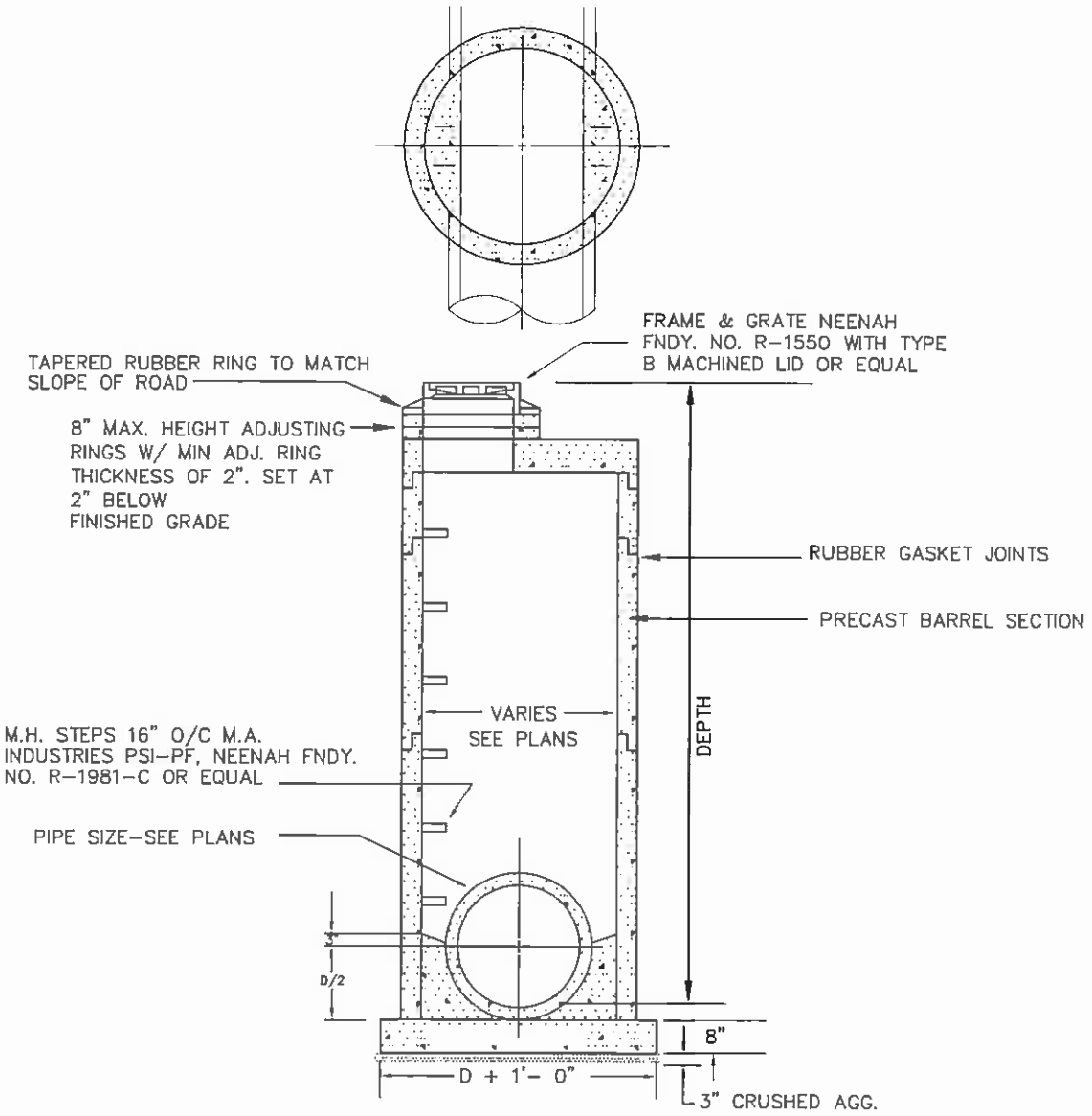

ADJUSTMENT OF CASTING SHALL USE LEAST AMOUNT OF RINGS POSSIBLE

S.11

Martenson & Eisele, Inc.
1377 Midway Road
Menasha, WI 54952
www.martenson-eisele.com
info@martenson-eisele.com
920.731.0381 1.800.236.0381
Planning
Environmental
Surveying
Engineering
Architecture

STORM SEWER MANHOLE

FIELD BK	PAGE		DRAWN BY EAE	CHECKED	APPROVED	DRAWING NO
SCALE N.T.S.	DATE 2-2-00	NO	DATE	REVISION		
COMPUTER FILE \\1500953\drawings\STORM SEWER MH.DWG						

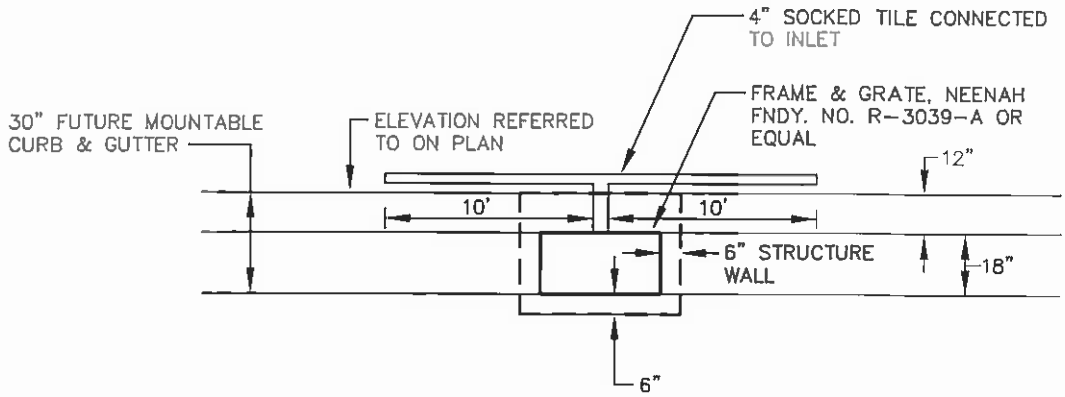

PLAN

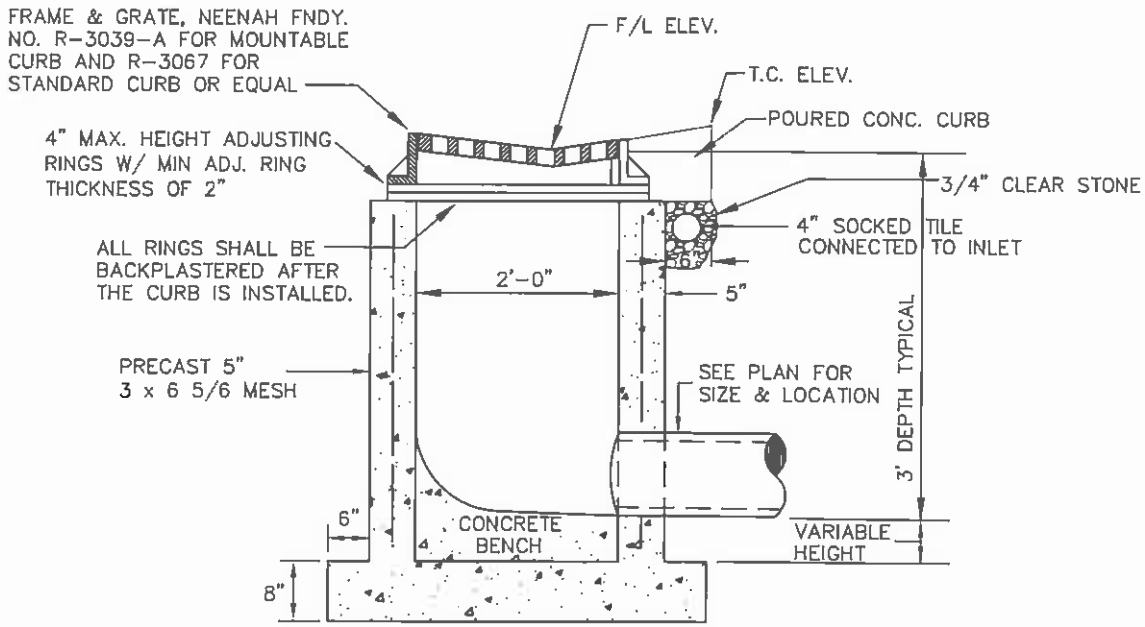

SECTION

S.12

Martenson & Eisele, Inc.
1377 Midway Road
Menasha, WI 54952
www.martenson-eisele.com
info@martenson-eisele.com
920.731.0381 1.800.236.0381
Planning
Environmental
Surveying
Engineering
Architecture

2'x3' INLET DETAIL

FIELD BK	PAGE		DRAWN BY	CHECKED	APPROVED	DRAWING NO
SCALE N.T.S.	DATE 2-2-06	NO	DATE	REVISION		
COMPUTER FILE INLET.DWG						

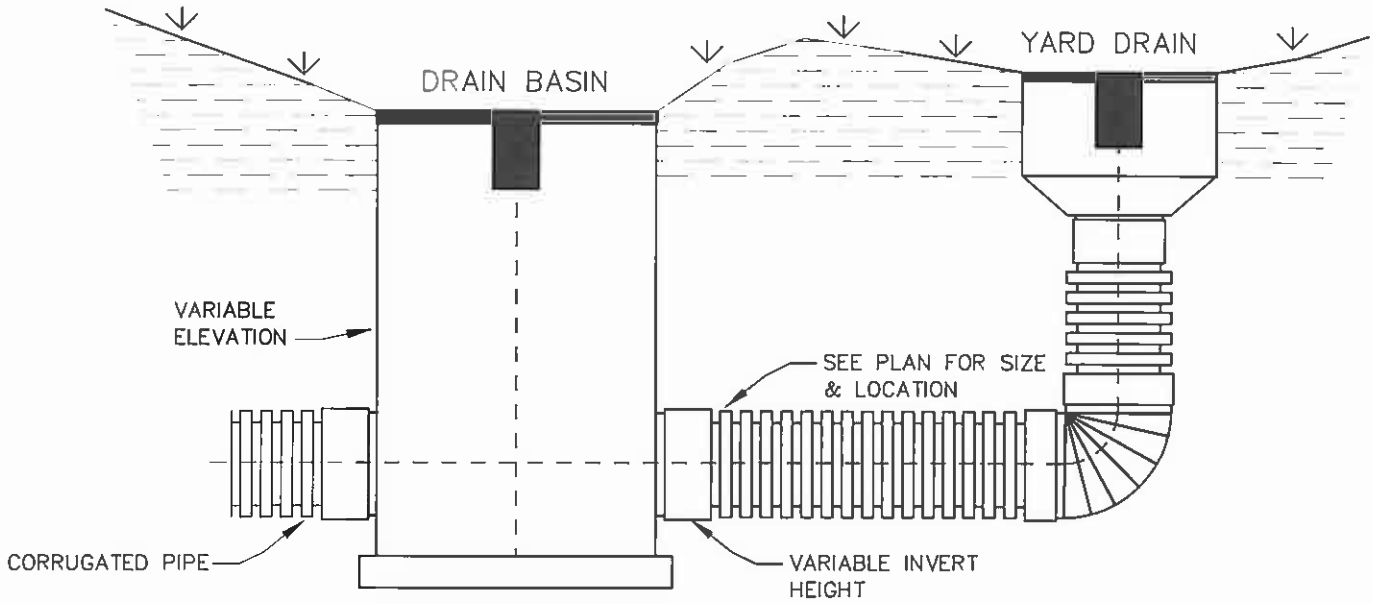

S.13

Martenson & Eisele, Inc.
1377 Midway Road
Menasha, WI 54952
www.martenson-eisele.com
info@martenson-eisele.com
920.731.0381 1.800.236.0381

Planning
Environmental
Surveying
Engineering
Architecture

HDPE
YARD DRAIN

FIELD BK	PAGE		DRAWN BY EAE	CHECKED	APPROVED	DRAWING NO
SCALE N.T.S.	DATE 2-2-06	NO	DATE	REVISION		
COMPUTER FILE [illegible] YARD DRAIN.DWG						

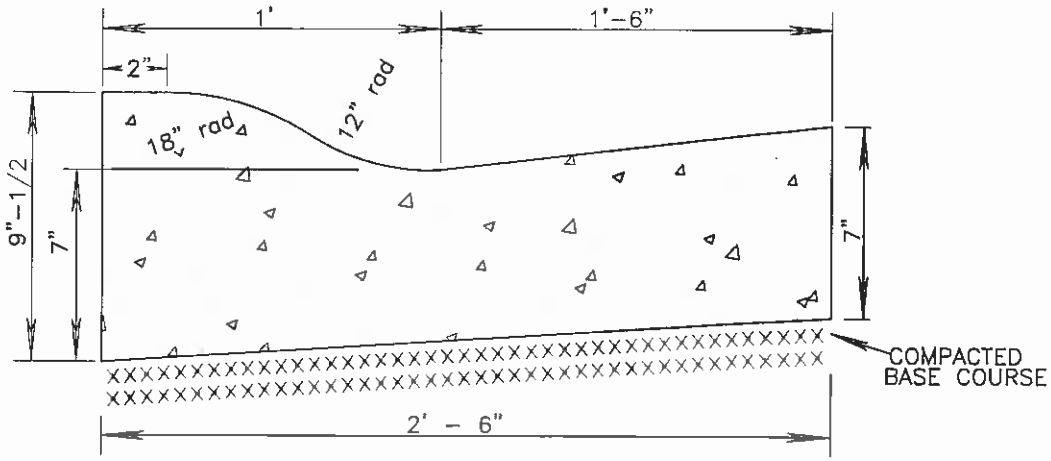

30" MOUNTABLE CURB & GUTTER

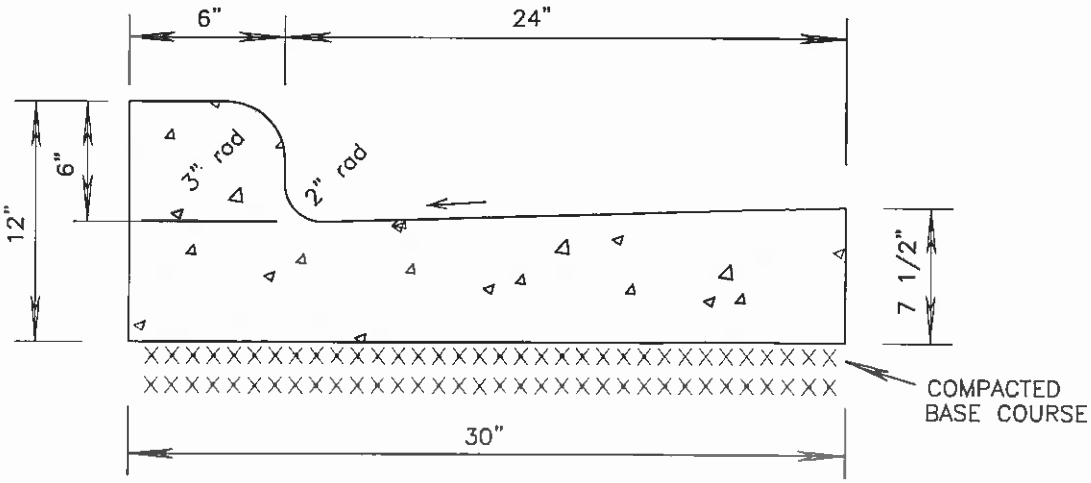

30" CURB & GUTTER

S.14

Martenson & Eisele, Inc.

1377 Midway Road
Menasha, WI 54952
www.martenson-eisele.com
info@martenson-eisele.com
920.731.0381 1.800.236.0381

Planning
Environmental
Surveying
Engineering
Architecture

CURB & GUTTER DETAILS

FIELD BK	PAGE		DRAWN BY	CHECKED	APPROVED	DRAWING NO
			EAE			
SCALE	DATE	NO	DATE	REVISION		
NTS	2-2-00					
COMPUTER FILE						
30 CURB & GUTTER.DWG						

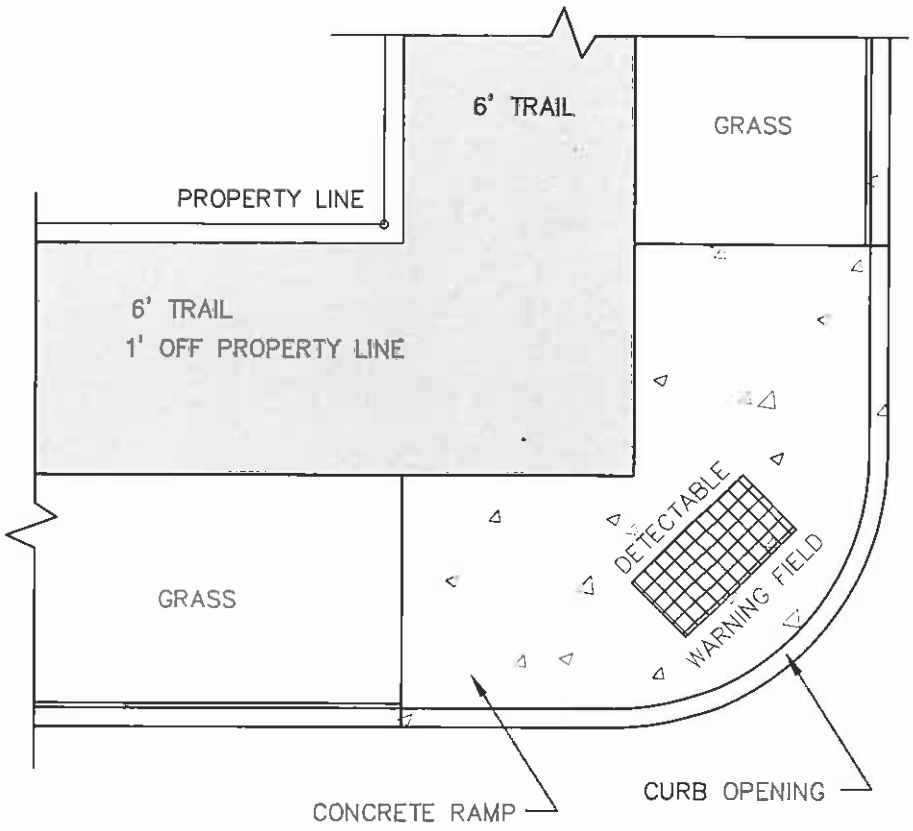

DETECTABLE WARNING FIELD

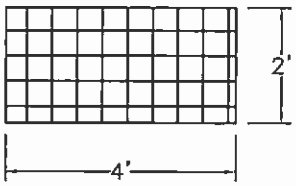

DETAIL

S.15

Martenson & Eisele, Inc.

1377 Midway Road
Menasha, WI 54952
www.martenson-eisele.com
info@martenson-eisele.com
920.731.0381 1.800.236.0381

Planning
Environmental
Surveying
Engineering
Architecture

TYPICAL TRAIL RAMP

FIELD BK	PAGE		DRAWN BY	CHECKED	APPROVED	DRAWING NO
			BAE			
SCALE	DATE	NO	DATE	REVISION		
N.T.S.	[illegible]					
COMPUTER FILE						
[illegible] TRAIL RAMP.DWG						

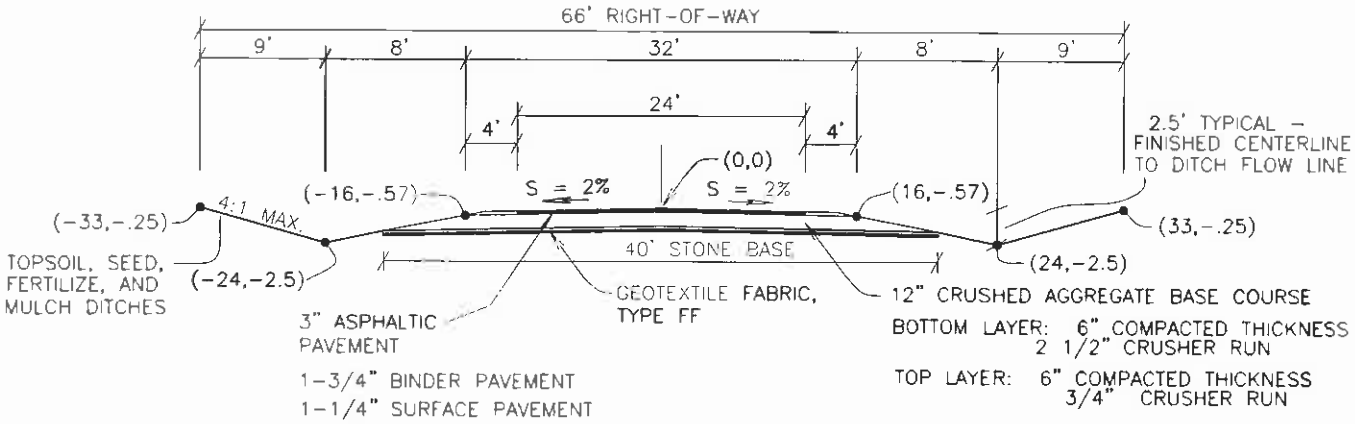

S.16

Martenson & Eisele, Inc.
1377 Midway Road
Menasha, WI 54952
www.martenson-eisele.com
info@martenson-eisele.com
920.731.0381 1.800.236.0381
Planning
Environmental
Surveying
Engineering
Architecture

TYPICAL STREET SECTION (66' R.O.W.)
RURAL - LOCAL

FIELD BK	PAGE		DRAWN BY	CHECKED	APPROVED	DRAWING NO
			EAE			
SCALE	DATE	NO	DATE	REVISION		
N.T.S.	2-2-05					
COMPUTER FILE						
[illegible]						
TYPICAL RURAL SECTION - LOCAL						

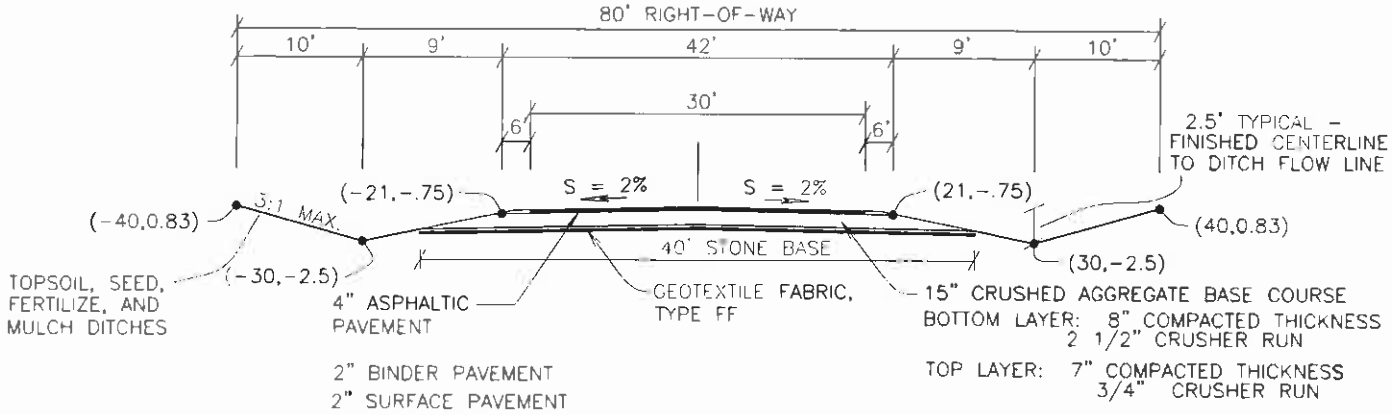

S.17

Martenson & Eisele, Inc.

1377 Midway Road
Menasha, WI 54952
www.martenson-eisele.com
info@martenson-eisele.com
920.731.0381 1.800.236.0381

Planning
Environmental
Surveying
Engineering
Architecture

TYPICAL STREET SECTION (80' R.O.W.)
RURAL - COLLECTOR

FIELD BK	PAGE		DRAWN BY	CHECKED	APPROVED	DRAWING NO
			EAE			
SCALE	DATE	NO	DATE	REVISION		
N.T.S.	2-2-05					
COMPUTER FILE						

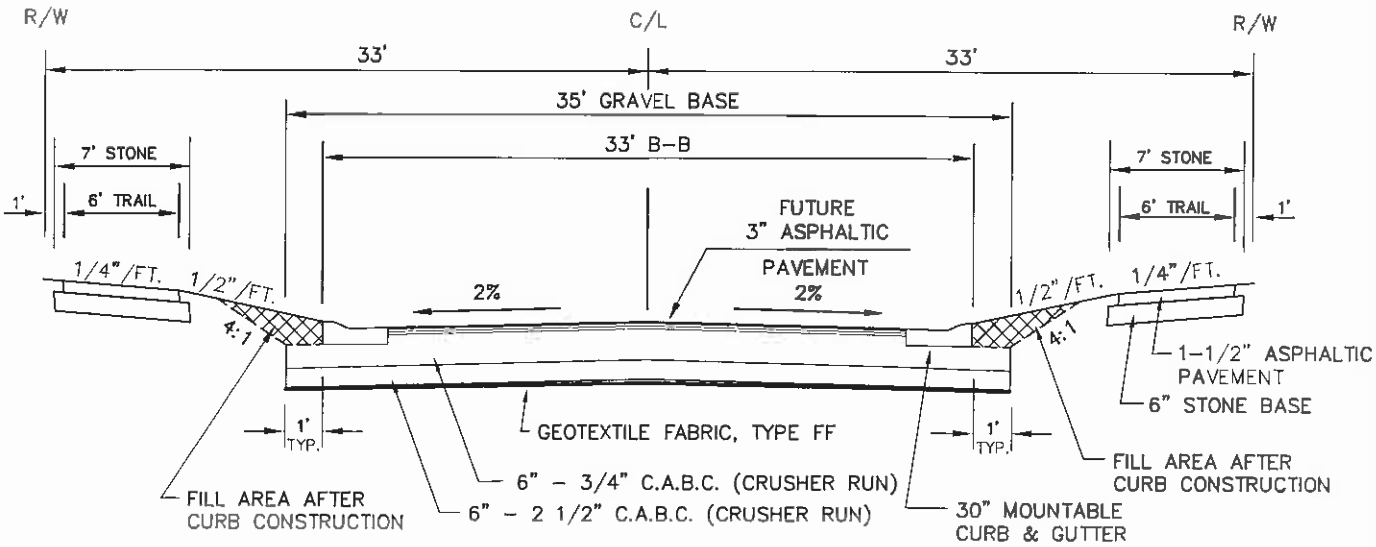

C/L	-0.36	= F/L
C/L	-0.11	= T/C
C/L	+0.43	= R/W

NOTE: 6' WIDE BITUMINOUS REC. TRAIL TO BE PAVED WHEN FINAL SURFACE COAT IS PLACED.

S.18

Martenson & Eisele, Inc.
1377 Midway Road
Menasha, WI 54952
www.martenson-eisele.com
info@martenson-eisele.com
920.731.0381 1.800.236.0381
Planning
Environmental
Surveying
Engineering
Architecture

TYPICAL STREET SECTION (66' R.O.W.)
URBAN - LOCAL

FIELD BK	PAGE		DRAWN BY	CHECKED	APPROVED	DRAWING NO
			EAE			
SCALE	DATE	NO	DATE	REVISION		
N.T.S.	7-7-05					
COMPUTER FILE						

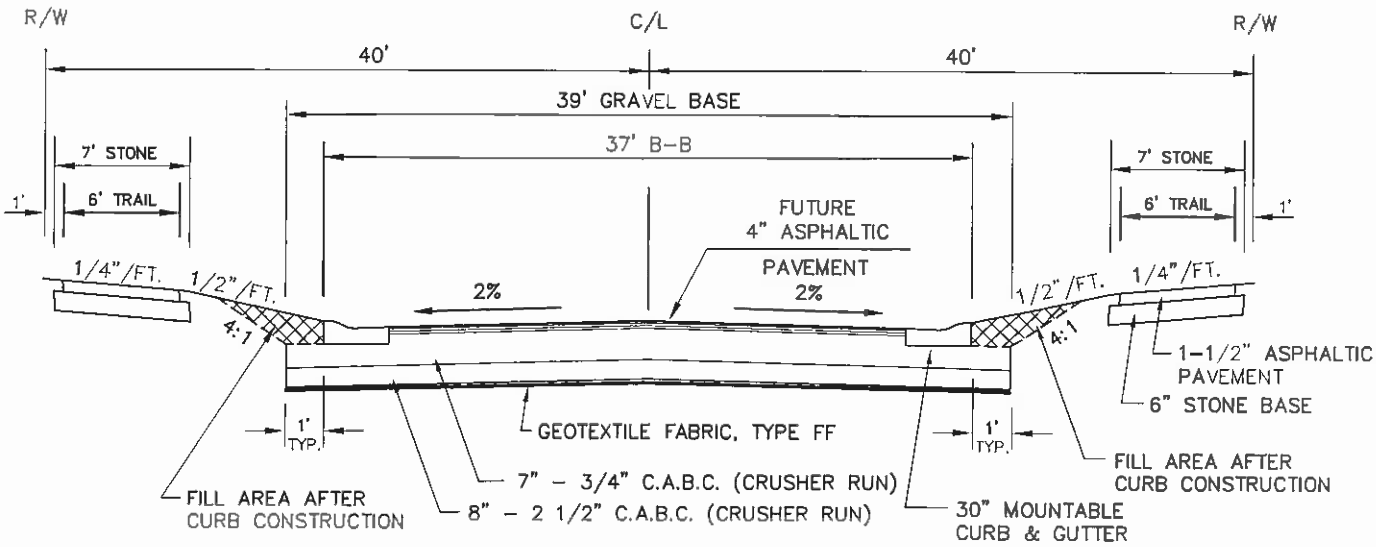

C/L	-0.40	= F/L
C/L	-0.15	= T/C
C/L	+0.60	= R/W

NOTE: 6' WIDE BITUMINOUS REC. TRAIL TO BE PAVED WHEN FINAL SURFACE COAT IS PLACED.

S.19

Martenson & Eisele, Inc.

1377 Midway Road
Menasha, WI 54952
www.martenson-eisele.com
Info@martenson-eisele.com
920.731.0381 1.800.236.0381

Planning
Environmental
Surveying
Engineering
Architecture

TYPICAL STREET SECTION (80' R.O.W.)
URBAN - COLLECTOR

FIELD BK	PAGE		DRAWN BY EAE	CHECKED	APPROVED	DRAWING NO
SCALE N.T.S.	DATE 2-2-96	NO	DATE	REVISION		
COMPUTER FILE						

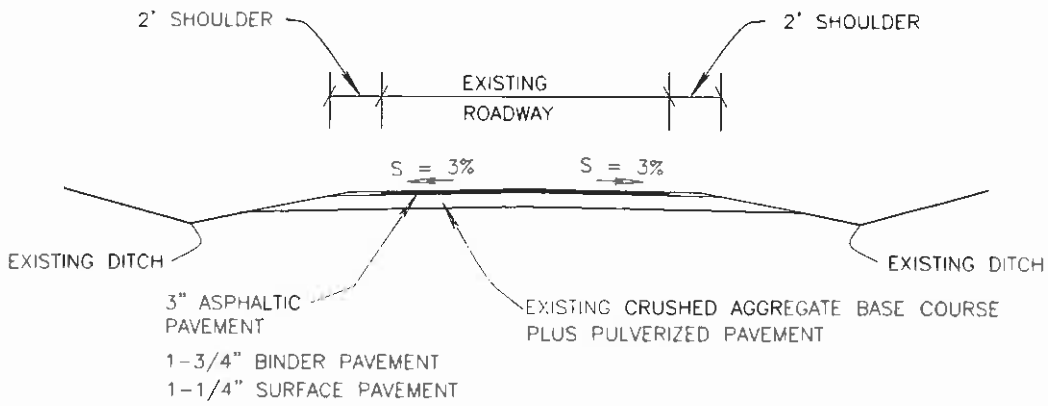

S.20

Martenson & Eisele, Inc.

1377 Midway Road
Menasha, WI 54952
www.martenson-eisele.com
info@martenson-eisele.com
920.731.0381 1.800.236.0381

Planning
Environmental
Surveying
Engineering
Architecture

PULVERIZED ROAD DETAIL

FIELD BK	PAGE		DRAWN BY EAE	CHECKED	APPROVED	DRAWING NO
SCALE N.T.S.	DATE 10-10-08	NO	DATE	REVISION		
COMPUTER FILE						

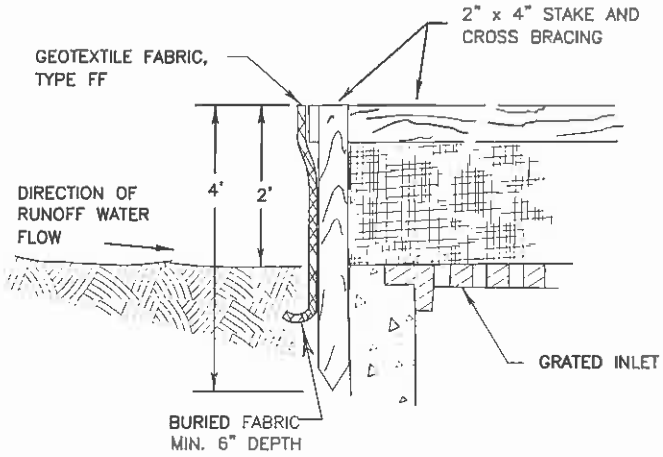

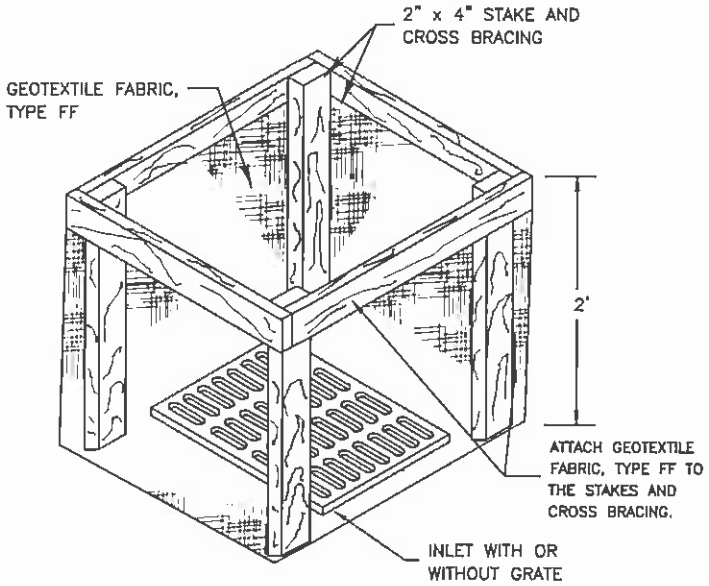

INLET PROTECTION, TYPE A

GENERAL NOTES

MANUFACTURED ALTERNATIVES APPROVED AND LISTED ON THE DEPARTMENT'S EROSION CONTROL PRODUCT ACCEPTABILITY LIST MAY BE SUBSTITUTED.

WHEN REMOVING OR MAINTAINING INLET PROTECTION, CARE SHALL BE TAKEN SO THAT THE SEDIMENT TRAPPED ON THE GEOTEXTILE FABRIC DOES NOT FALL INTO THE INLET. ANY MATERIAL FALLING INTO THE INLET SHALL BE REMOVED IMMEDIATELY.

1. FINISHED SIZE, INCLUDING FLAP POCKETS WHERE REQUIRED, SHALL EXTEND A MINIMUM OF 10" AROUND THE PERIMETER TO FACILITATE MAINTENANCE OR REMOVAL.
2. FOR INLET PROTECTION, TYPE C (WITH CURB BOX), AN ADDITIONAL 18" OF FABRIC IS WRAPPED AROUND THE WOOD AND SECURED WITH STAPLES. THE WOOD SHALL NOT BLOCK THE ENTIRE HEIGHT OF THE CURB BOX OPENING.
3. FLAP POCKETS SHALL BE LARGE ENOUGH TO ACCEPT WOOD 2X4.

S.21

Martenson & Eisele, Inc.
1377 Midway Road
Menasha, WI 54952
www.martenson-eisele.com
info@martenson-eisele.com
920.731.0381 1.800.236.0381
Planning
Environmental
Surveying
Engineering
Architecture

INLET PROTECTION, TYPE A

FIELD BK	PAGE		DRAWN BY EAE	CHECKED	APPROVED	DRAWING NO
SCALE N.T.S.	DATE 10-10-08	NO	DATE	REVISION		
COMPUTER FILE 1155905dcdrawings INLET PROTECTION TYPE A.DWG						

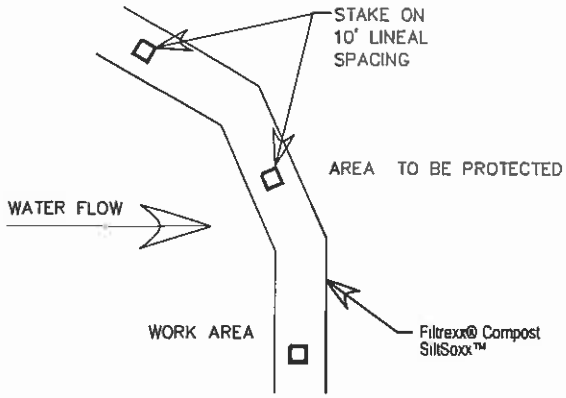

Filtrexx®SiltSoxx™
Plan View

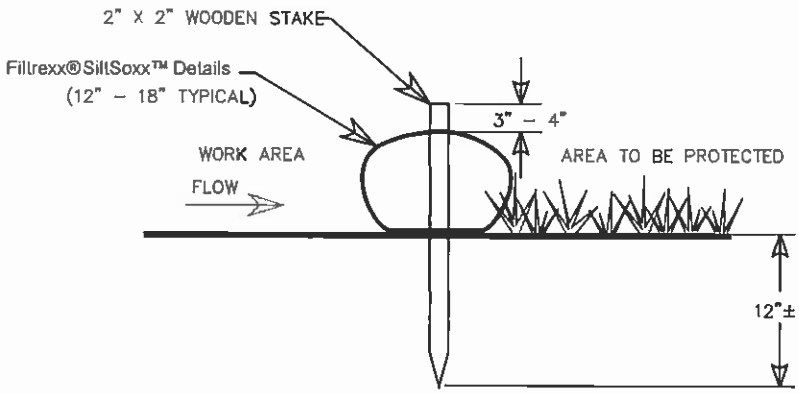

Filtrexx®SiltSoxx™ Section

NOTES:

1. ALL MATERIAL TO MEET FILTREXX® SPECIFICATIONS
2. SILTSOXX™ COMPOST/JSOIL/ROCK/SEED FILL TO MEET APPLICATION REQUIREMENTS.
3. SILTSOXX™ DEPICTED IS FOR MINIMUM SLOPES. GREATER SLOPES MAY REQUIRE LARGER SOCKS PER THE ENGINEER.
4. COMPOST MATERIAL TO BE DISPERSED ON SITE, AS DETERMINED BY ENGINEER.

Filtrexx®SiltSoxx™ Details

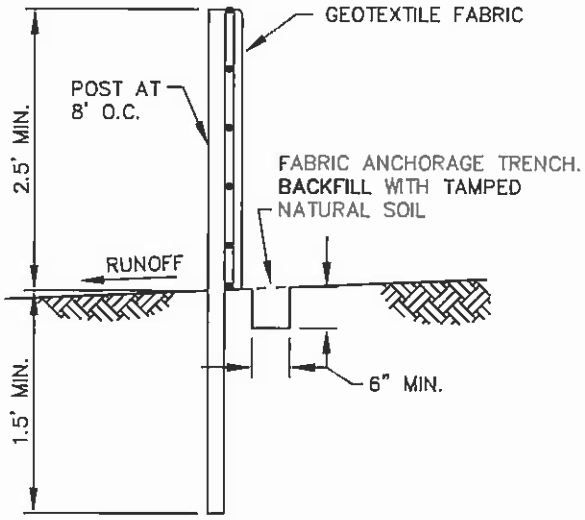

S.22

Martenson & Eisele, Inc.
1377 Midway Road
Menasha, WI 54952
www.martenson-eisele.com
info@martenson-eisele.com
920.731.0381 1.800.236.0381
Planning
Environmental
Surveying
Engineering
Architecture

SOCK & SILT FENCE – INSTALLATION DETAIL

FIELD BK	PAGE		DRAWN BY	CHECKED	APPROVED	DRAWING NO
			CAE			
SCALE	DATE	NO	DATE	REVISION		
N.T.S.	2-2-06					
COMPUTER FILE						
SILT FENCE.DWG						

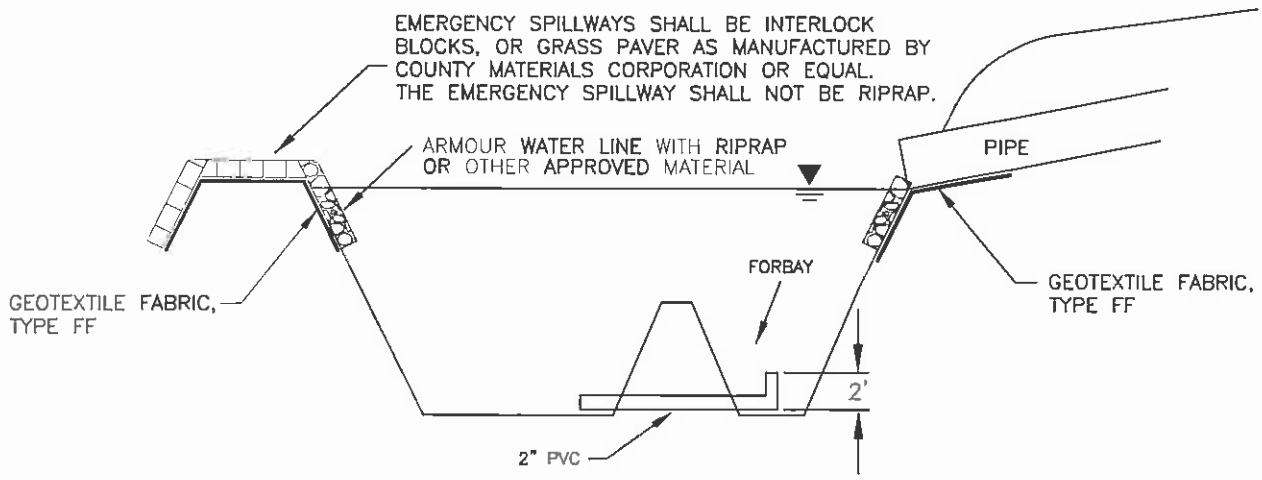

ALL CLAY LINERS SHALL BE TESTED AND CONFORM TO THE WDNR STORM WATER MANAGEMENT TECHNICAL STANDARDS.

S.23

Martenson & Eisele, Inc.

1377 Midway Road
Menasha, WI 54952
www.martenson-eisele.com
info@martenson-eisele.com
920.731.0381 1.800.236.0381

Planning
Environmental
Surveying
Engineering
Architecture

POND DETAIL

FIELD BK	PAGE		DRAWN BY EAE	CHECKED	APPROVED	DRAWING NO
SCALE N.T.S.	DATE 2.2.46	NO	DATE	REVISION		
COMPUTER FILE						

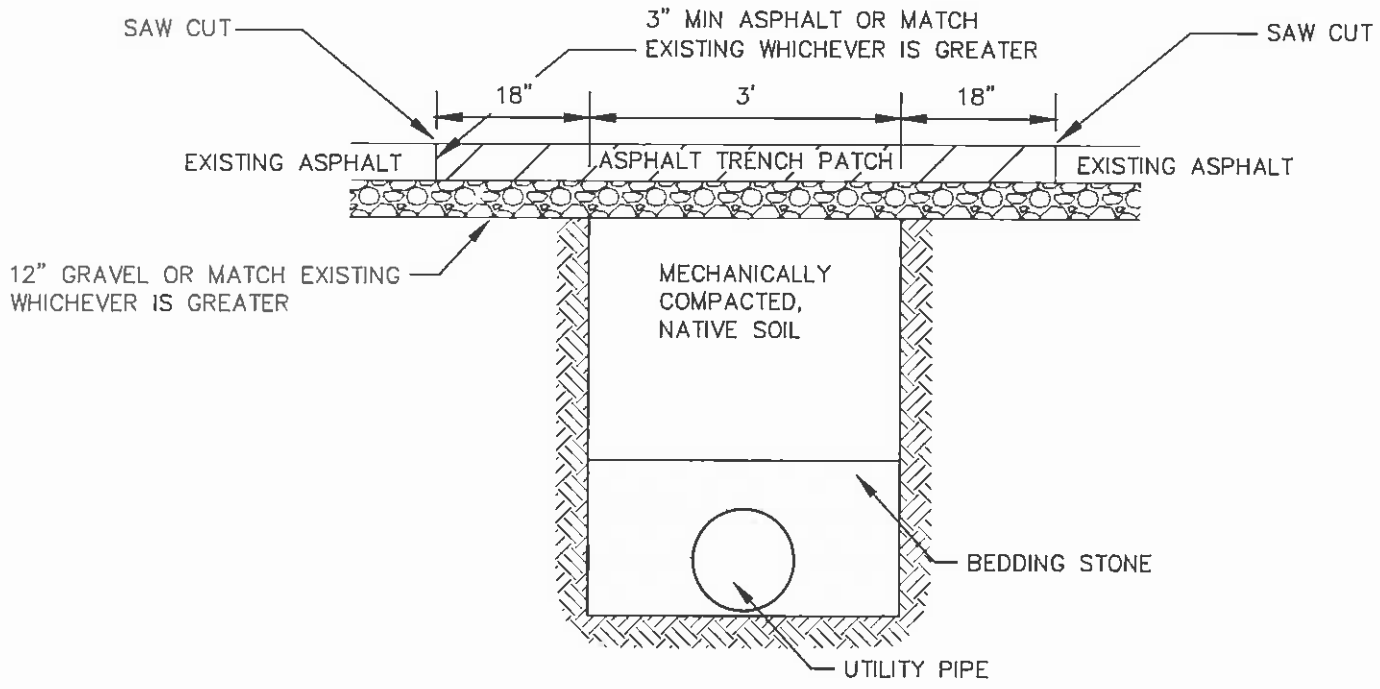

S.24

Martenson & Eisele, Inc.
1377 Midway Road
Menasha, WI 54952
www.martenson-eisele.com
info@martenson-eisele.com
920.731.0381 1.800.236.0381
Planning
Environmental
Surveying
Engineering
Architecture

UTILITY TRENCH REPAIR DETAIL

FIELD BK	PAGE		DRAWN BY	CHECKED	APPROVED	DRAWING NO
			EAE			
SCALE	DATE	NO	DATE	REVISION		
N.T.S.	2-2-05					
COMPUTER FILE						
[illegible]						
UTILITY TRENCH.DWG						

S.25

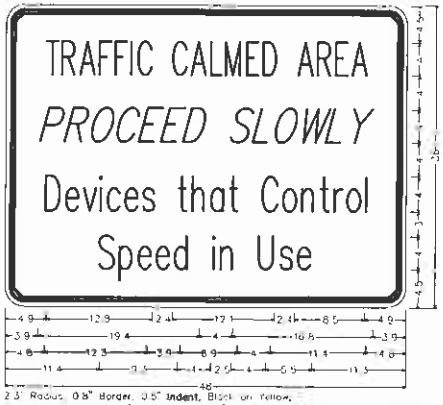

2.5" Radius, 0.8" Border, 0.5" Indent, Black on Yellow.
[TRAFFIC CALMED AREA] @ 60° spacing, [PROCEED SLOWLY] @ 208° spacing,
[Devices that Control] @ 30° spacing, [Speed in Use] @ 50° spacing.
REFLECTIVE SHEETING SIGN

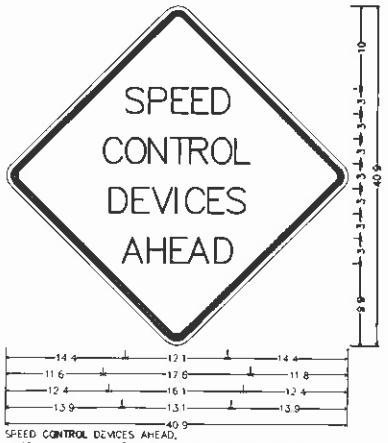

SPEED CONTROL DEVICES AHEAD.
30.0" across sides 1.9" Radius, 0.8" Border, 0.5" Indent, Black on Yellow.
[SPEED] D Georgia, [CONTROL] D Georgia, [DEVICES] D Georgia,
[AHEAD] D Georgia.
REFLECTIVE SHEETING SIGN

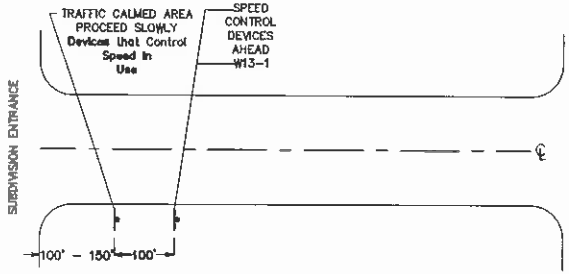

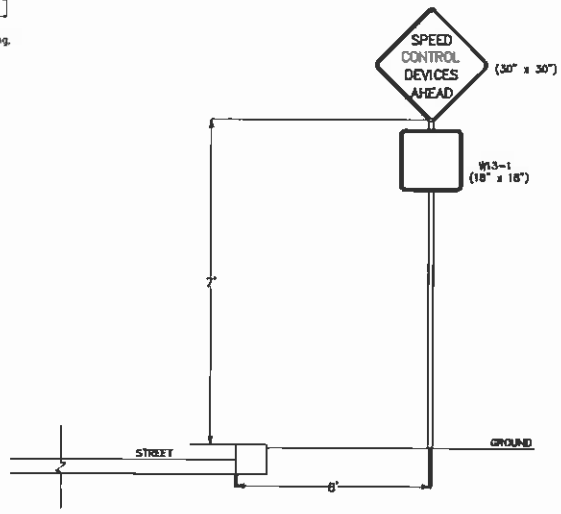

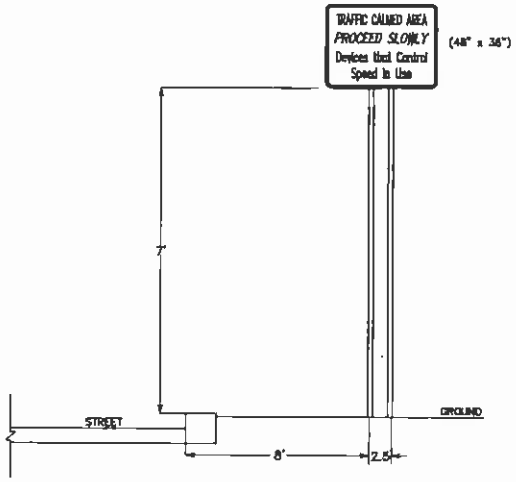

TYPICAL SIGNAGE INSTALLATION

NOT TO SCALE

GWINNETT COUNTY TRAFFIC CALMING DESIGN GUIDE	APRIL 2006
NONSTANDARD SIGNS AND INSTALLATION DETAILS	DRAWING NO. TC-01

NONSTANDARD SIGNS AND INSTALLATION DETAILS

FIELD BK	PAGE	DRAWN BY	CHECKED	APPROVED	DRAWING NO
SCALE N.T.S.	DATE 11/20/07	NO	DATE	REVISION	
COMPUTER FILE					

Martenson & Eisele, Inc.
1377 Midway Road
Menasha, WI 54952
www.martenson-eisele.com
info@martenson-eisele.com
920.731.0381 1.800.236.0381
Planning
Environmental
Surveying
Engineering
Architecture

S.26

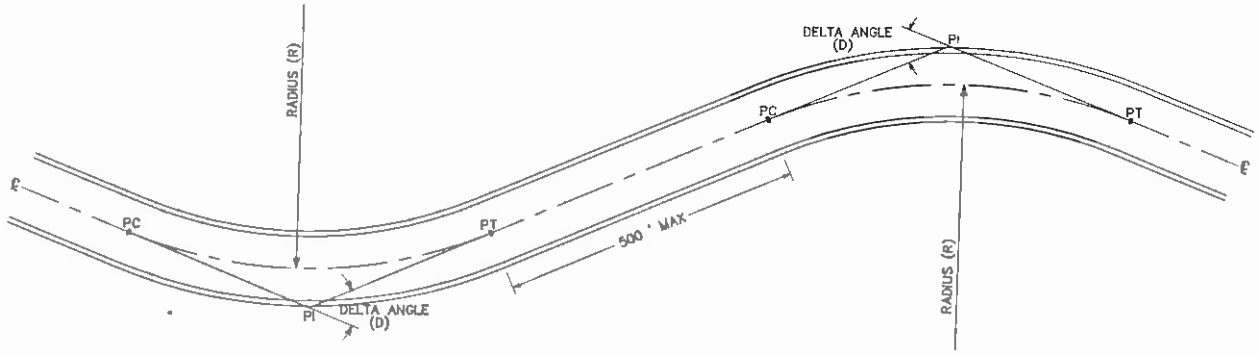

LOW SPEED CURVE VALUES

DELTA ANGLE (D) (30° MIN)	RADIUS (R)
30° – 40	100'
41° – 50	120' (MIN) – 130' (MAX)
>=51°	120' (MIN) – 150' (MAX)

NOTE: 1. WHEN COMPOUND CURVES ARE USED, THE MAXIMUM RATIO OF THE FLATTER RADIUS TO THE SHARPER RADIUS SHOULD BE 1.75:1.

2. ENSURE INTERSECTION SIGHT DISTANCE IS MAINTAINED AT ALL ROADS & DRIVEWAYS.

NOT TO SCALE

GWINNETT COUNTY TRAFFIC CALMING DESIGN GUIDE	APRIL 2006
LOW SPEED CURVE	DRAWING NO. TC-02

LOW SPEED CURVE

FIELD BK	PAGE		DRAWN BY EAE	CHECKED	APPROVED	DRAWING NO
SCALE 1:1.5	DATE 11/20/07	NO	DATE	REVISION		
COMPUTER FILE Traffic Calming\TC-02.dwg						

Martenson & Eisele, Inc.
1377 Midway Road
Menasha, WI 54952
www.martenson-eisele.com
info@martenson-eisele.com
920.731.0381 1.800.236.0381
Planning
Environmental
Surveying
Engineering
Architecture

S.27

SIGN DESCRIPTION:

R1-2 YIELD
OM-3L OBJECT MARKER
W2-6 CIRCULAR INTERSECTION
W13-1 ADVISORY SPEED (15 MPH)

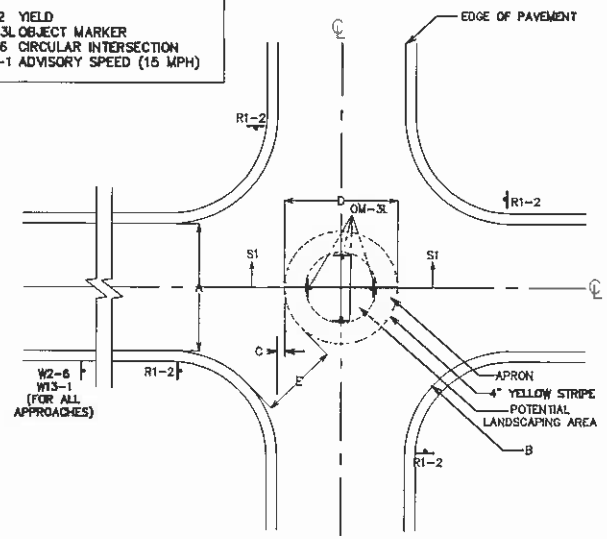

PLAN VIEW (FOUR-LEG INTERSECTION)

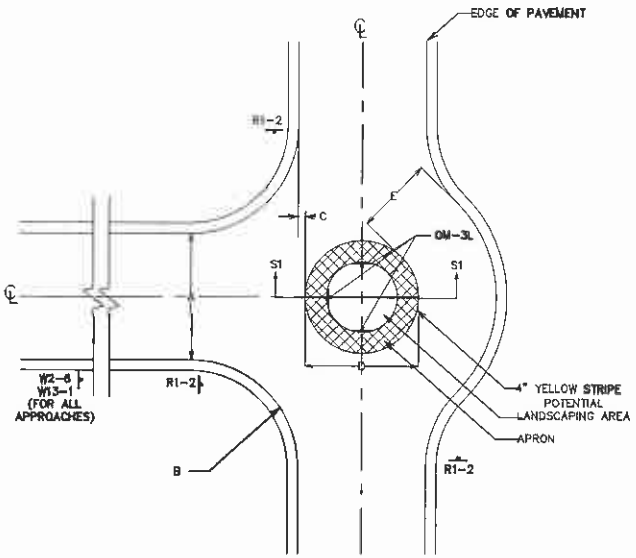

PLAN VIEW (THREE-LEG INTERSECTION)

NOTE: 1. TRAFFIC CIRCLES SHALL BE USED ONLY IF ALTERNATE ROUTES ARE PROVIDED TO ALL GENERATORS BEYOND TRAFFIC CIRCLES.
2. DRIVEWAYS SHALL NOT BE LOCATED WITHIN 20' OF TRAFFIC CIRCLE.

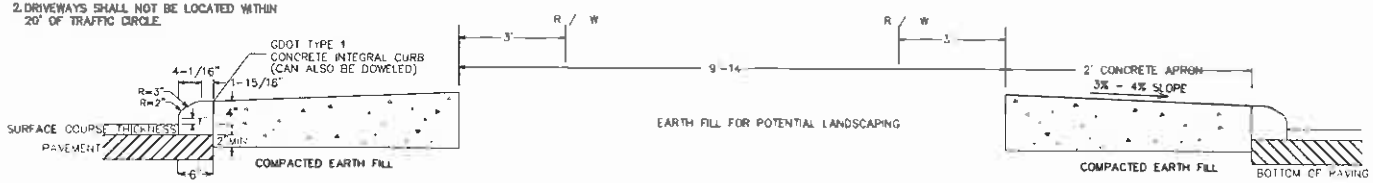

SECTION S1-S1

NOT TO SCALE

GWINNETT COUNTY TRAFFIC CALMING DESIGN GUIDE	APRIL 2008
TRAFFIC CIRCLE INSTALLATION DETAILS	DRAWING NO. TC-03

TRAFFIC CIRCLE INSTALLATION DETAILS

FIELD BK	PAGE		DRAWN BY EAE	CHECKED	APPROVED	DRAWING NO
SCALE N.T.S.	DATE 11/2007	NO	DATE	REVISION		
COMPUTER FILE TrafficCalmingGuide.dwg						

Martenson & Eisele, Inc.
Planning
Environmental
Surveying
Engineering
Architecture
1377 Midway Road
Menasha, WI 54952
www.martenson-eisele.com
info@martenson-eisele.com
920.731.0381 1.800.236.0381

STREET WIDTH (FEET)	CURB RETURN RADIUS (FEET)	OFFSET DISTANCE (FEET)	CIRCLE DIAMETER (FEET)	OPENING WIDTH (FEET)
A	B	C	D	E
19'	30' MIN.	2.5'	14'	18'
21'	30' MIN.	2.5'	16'	19'
23'	25'	2.5'	18'	18'
	30'	2.0'	19'	19'

TRAFFIC CIRCLE DIMENSIONS

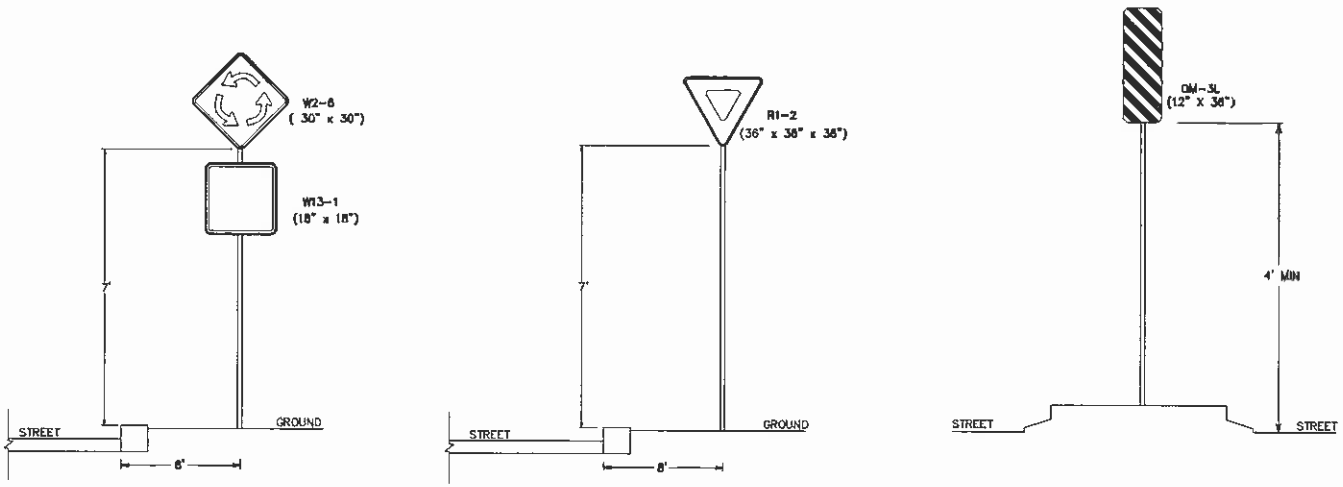

TYPICAL SIGNAGE INSTALLATION

S.28

TRAFFIC CIRCLE SIGNAGE

FIELD BK	PAGE	DRAWN BY EAE	CHECKED	APPROVED	DRAWING NO
SCALE N.T.S.	DATE 11-20-07	NO	DATE	REVISION	
COMPUTER FILE TrafficCalming06C-D.dwg					

Martenson & Eisele, Inc.
1377 Midway Road
Menasha, WI 54952
www.martenson-eisele.com
info@martenson-eisele.com
920.731.0381 1.800.236.0381
Planning
Environmental
Surveying
Engineering
Architecture

NOT TO SCALE

GWINNETT COUNTY TRAFFIC CALMING DESIGN GUIDE	APRIL 2006
TRAFFIC CIRCLE SIGNAGE	DRAWING NO. TC-04

S.29

SIGN DESCRIPTION:
OM-3L OBJECT MARKER

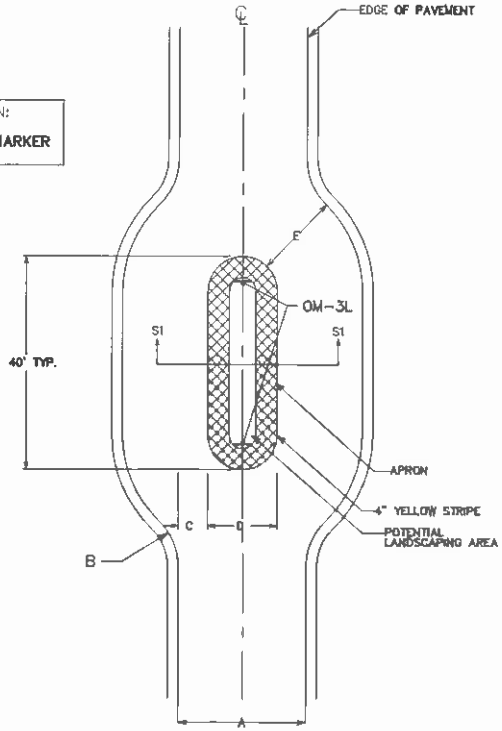

PLAN VIEW

STREET WIDTH (FEET)	CURB RETURN RADIUS (FEET)	OFFSET DISTANCE (FEET)	CIRCLE DIAMETER (FEET)	OPENING WIDTH (FEET)
A	B	C	D	E
19'	20' (MIN.)	6.0'	9'	16'
	25' (MAX.)	4.0'	11'	17'
21'	20' (MIN.)	6.0'	11'	16'
	25' (MAX.)	4.0'	13'	17'
23'	20' (MIN.)	6.0'	13'	16'
	25' (MIN.)	4.0'	15'	17'

MEDIAN ISLAND (OPTION 1) DIMENSIONS

NOTE: 1. DRIVEWAYS SHALL NOT BE LOCATED WITHIN 20' OF MEDIAN ISLAND

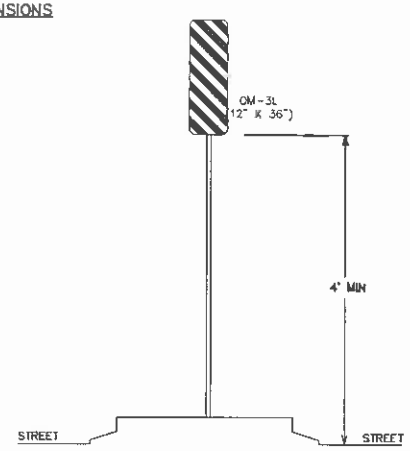

TYPICAL SIGNAGE INSTALLATION

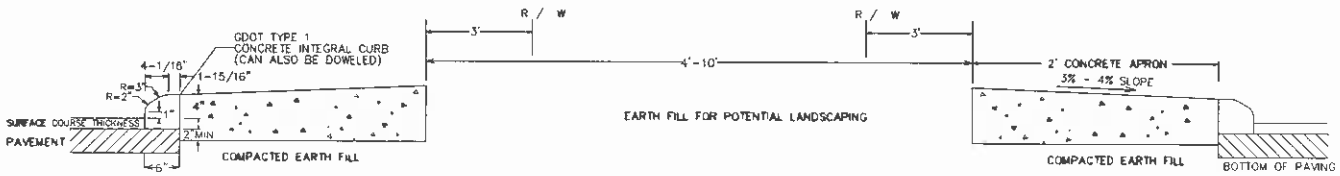

SECTION S1-S1

NOT TO SCALE

GWINNETT COUNTY TRAFFIC CALMING DESIGN GUIDE	APRIL 2006
MEDIAN ISLAND INSTALLATION DETAILS AND SIGNAGE (OPTION 1)	DRAWING NO. TC-05

MEDIAN ISLAND INSTALLATION DETAILS AND SIGNAGE (OPTION 1)

FIELD BK	PAGE	DRAWN BY E-E	CHECKED	APPROVED	DRAWING NO
SCALE N.T.S.	DATE 11/20/07	NO	DATE	REVISION	
COMPUTER FILE					

Martenson & Eisele, Inc.
1377 Midway Road
Menasha, WI 54952
www.martenson-eisele.com
info@martenson-eisele.com
920.731.0381 1.800.236.0381
Planning
Environmental
Surveying
Engineering
Architecture

S.30

SIGN DESCRIPTION:

OM-3L OBJECT MARKER
R1-1 STOP

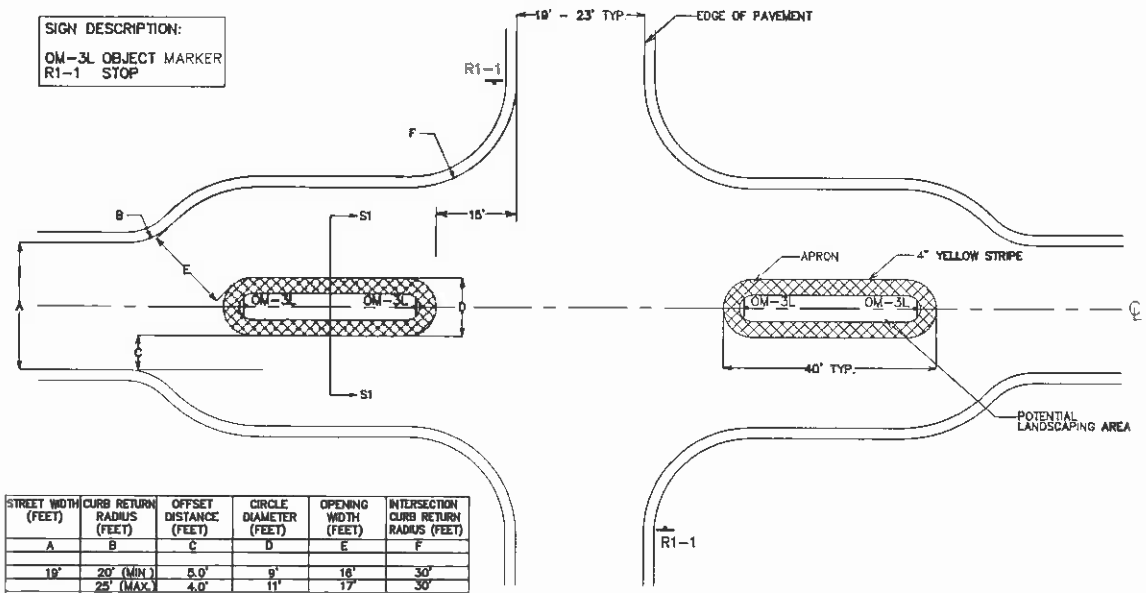

STREET WIDTH (FEET)	CURB RETURN RADIUS (FEET)	OFFSET DISTANCE (FEET)	CIRCLE DIAMETER (FEET)	OPENING WIDTH (FEET)	INTERSECTION CURB RETURN RADIUS (FEET)
A	B	C	D	E	F
19'	20' (MIN.)	5.0'	9'	16'	30'
	25' (MAX.)	4.0'	11'	17'	30'
21'	20' (MIN.)	5.0'	11'	16'	30'
	25' (MAX.)	4.0'	13'	17'	30'
23'	20' (MIN.)	5.0'	13'	16'	30'
	25' (MIN.)	4.0'	15'	17'	30'

MEDIAN ISLAND (OPTION 1) DIMENSIONS
(WHEN USED AT INTERSECTIONS)

NOTE: 1. ENSURE INTERSECTION SIGHT DISTANCE IS MAINTAINED.
2. MEDIAN ISLANDS SHALL BE USED AT INTERSECTIONS ONLY IF ALTERNATE ROUTES ARE PROVIDED TO ALL GENERATORS BEYOND THESE MEDIAN ISLANDS.
3. DRIVEWAYS SHALL NOT BE LOCATED WITHIN 20' OF MEDIAN ISLAND.

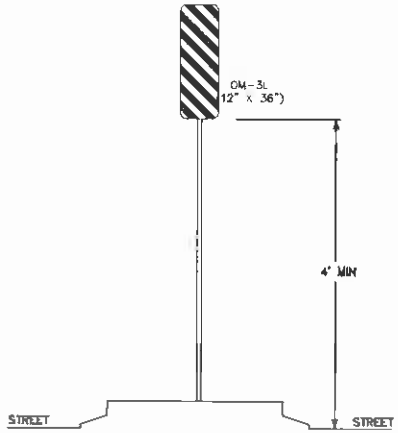

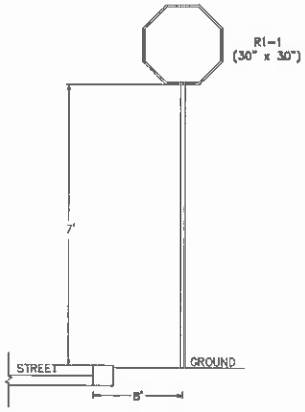

TYPICAL SIGNAGE INSTALLATION

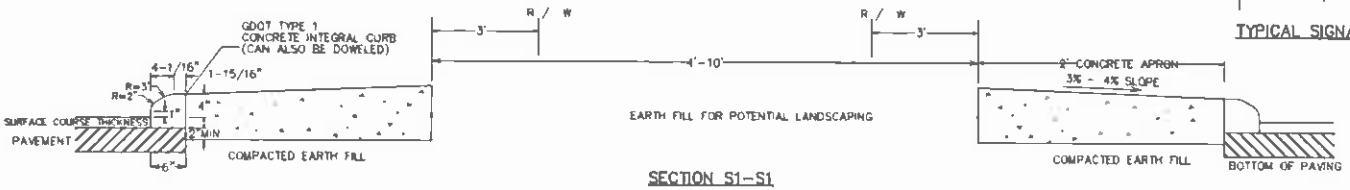

SECTION S1-S1

NOT TO SCALE

GWINNETT COUNTY TRAFFIC CALMING DESIGN GUIDE	APRIL 2006
MEDIAN ISLAND INSTALLATION DETAILS AND SIGNAGE (OPTION 1) AT INTERSECTIONS	DRAWING NO. TC-05A

MEDIAN ISLAND INSTALLATION DETAILS AND SIGNAGE (OPTION 1) AT INTERSECTIONS

FIELD BK	PAGE		DRAWN BY EAE	CHECKED	APPROVED	DRAWING NO
SCALE N.T.S.	DATE 11/20/07	NO	DATE	REVISION		
COMPUTER FILE						

Martenson & Eisele, Inc.
1377 Midway Road
Menasha, WI 54952
www.martenson-eisele.com
info@martenson-eisele.com
920.731.0381 1.800.236.0381
Planning
Environmental
Surveying
Engineering
Architecture

S.31

SIGN DESCRIPTION:
OM-3L OBJECT MARKER

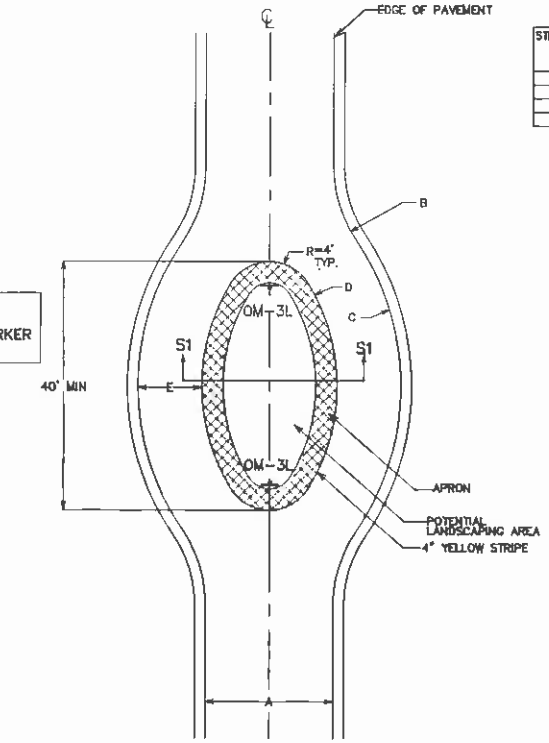

PLAN VIEW

STREET WIDTH (FEET)	CURB RETURN RADIUS (FEET)	OUTER RADIUS OF ROADWAY (FEET)	RADIUS OF ISLAND (FEET)	OPENING WIDTH (FEET)
A	B	C	D	E
19'	35' MIN	53'	37'	16'
21'	25' MIN	54'	37'	17'
23'	15' MIN	55'	37'	18'

MEDIAN ISLAND (OPTION 2) DIMENSIONS

NOTE. 1. DRIVEWAYS SHALL NOT BE LOCATED WITHIN 20' OF MEDIAN ISLAND.

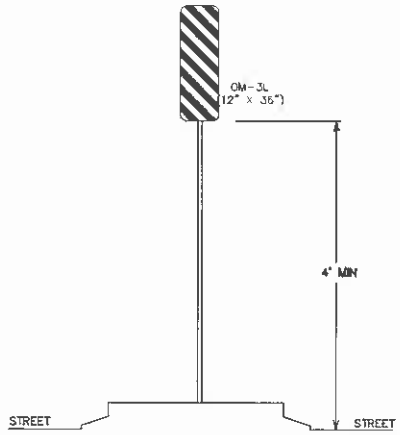

TYPICAL SIGNAGE INSTALLATION

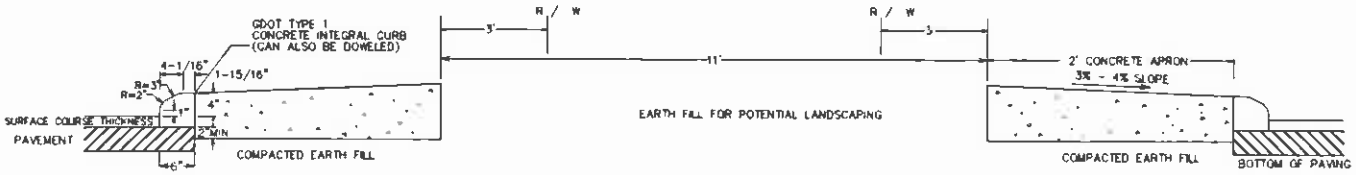

SECTION S1-S1

NOT TO SCALE

GWINNETT COUNTY TRAFFIC CALMING DESIGN GUIDE	APRIL 2006
MEDIAN ISLAND INSTALLATION DETAILS AND SIGNAGE (OPTION 2)	DRAWING NO. TC-06

MEDIAN ISLAND INSTALLATION DETAILS AND SIGNAGE (OPTION 2)

FIELD BK	PAGE	DRAWN BY EAE	CHECKED	APPROVED	DRAWING NO
SCALE N.T.S.	DATE 11/2001	NO	DATE	REVISION	
COMPUTER FILE Traffic Calming Design Guide					

Martenson & Eisele, Inc.
1377 Midway Road
Menasha, WI 54952
www.martenson-eisele.com
info@martenson-eisele.com
920.731.0381 1.800.236.0381
Planning
Environmental
Surveying
Engineering
Architecture

S.32

SIGN DESCRIPTION:

R1-2 YIELD
W2-6 CIRCULAR INTERSECTION
W13-1 ADVISORY SPEED (15 MPH)
W3-2A YIELD AHEAD
W1-6 ONE DIRECTION **LARGE ARROW**

NOTE: 1. DRIVEWAYS SHALL NOT BE LOCATED WITHIN 20' OF ROUNDABOUT.
2. ROUNDABOUT DESIGN SHOULD FOLLOW THE GUIDELINES PRESENTED IN ROUNDABOUT: AN INFORMATIONAL GUIDE, US DEPARTMENT OF TRANSPORTATION, FEDERAL HIGHWAY ADMINISTRATION, PUBLICATION NO. FHWA-RD-00-067.

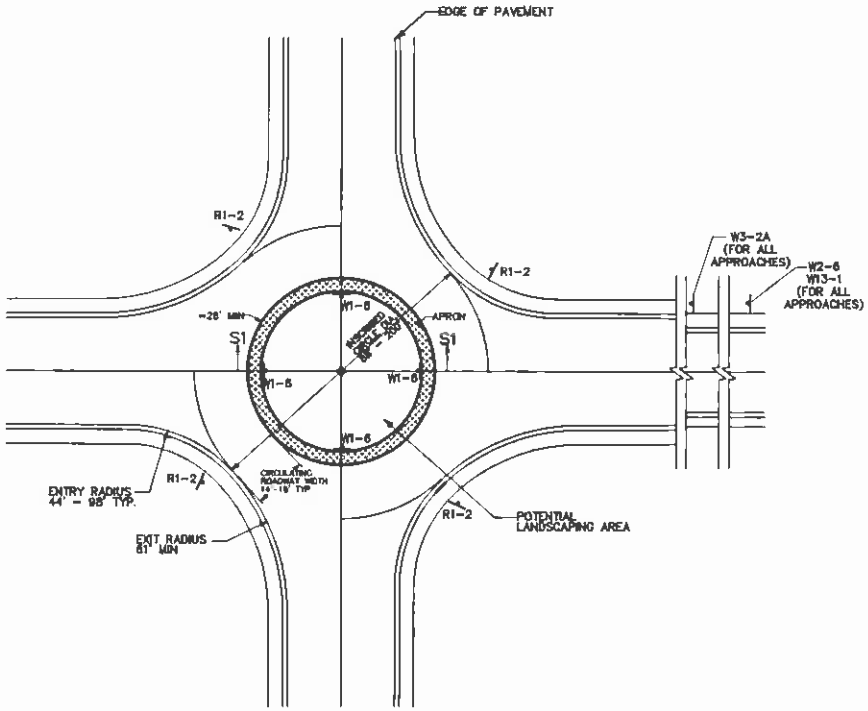

PLAN VIEW

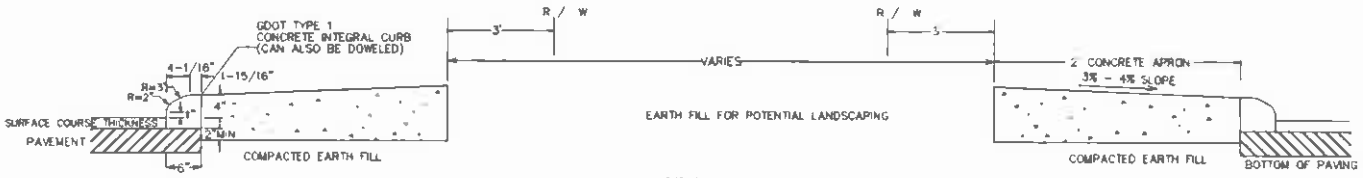

SECTION S1-S1

NOT TO SCALE

GWINNETT COUNTY TRAFFIC CALMING DESIGN GUIDE	APRIL 2006
ROUNDABOUT INSTALLATION DETAILS	DRAWING NO. TC-07

ROUNDABOUT INSTALLATION DETAILS

FIELD BK	PAGE		DRAWN BY EAE	CHECKED	APPROVED	DRAWING NO
SCALE N.T.S.	DATE 1/1/2007	NO	DATE	REVISION		
COMPUTER FILE						

Martenson & Eisele, Inc.
1377 Midway Road
Menasha, WI 54952
www.martenson-eisele.com
info@martenson-eisele.com
920.731.0381 1.800.236.0381
Planning
Environmental
Surveying
Engineering
Architecture

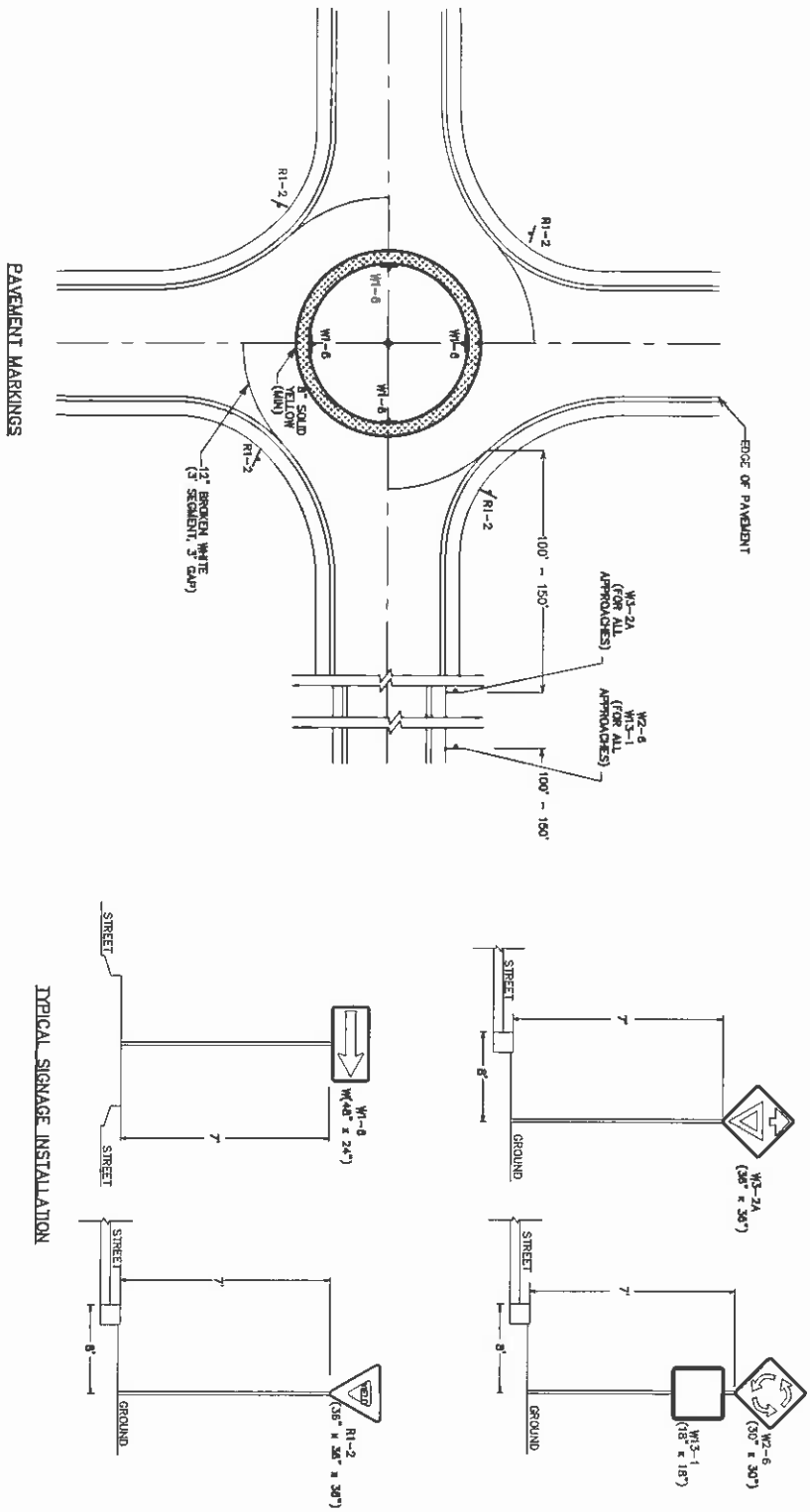

S.33

GWINNETT COUNTY TRAFFIC CALMING DESIGN GUIDE

ROUNDABOUT MARKINGS AND SIGNAGE

NOT TO SCALE

APRIL 2006

DRAWING NO. TC-08

Martenson & Eisele, Inc.
1377 Midway Road
Menasha, WI 54952
www.martenson-eisele.com
info@martenson-eisele.com
920.731.0381 1.800.236.0381

Planning
Environmental
Surveying
Engineering
Architecture

ROUNDABOUT MARKINGS AND SIGNAGE

FIELD BK	PAGE		DRAWN BY	CHECKED	APPROVED	DRAWING NO
SCALE N.T.S.	DATE 11/20/07	NO	DATE	REVISION		
COMPUTER FILE						

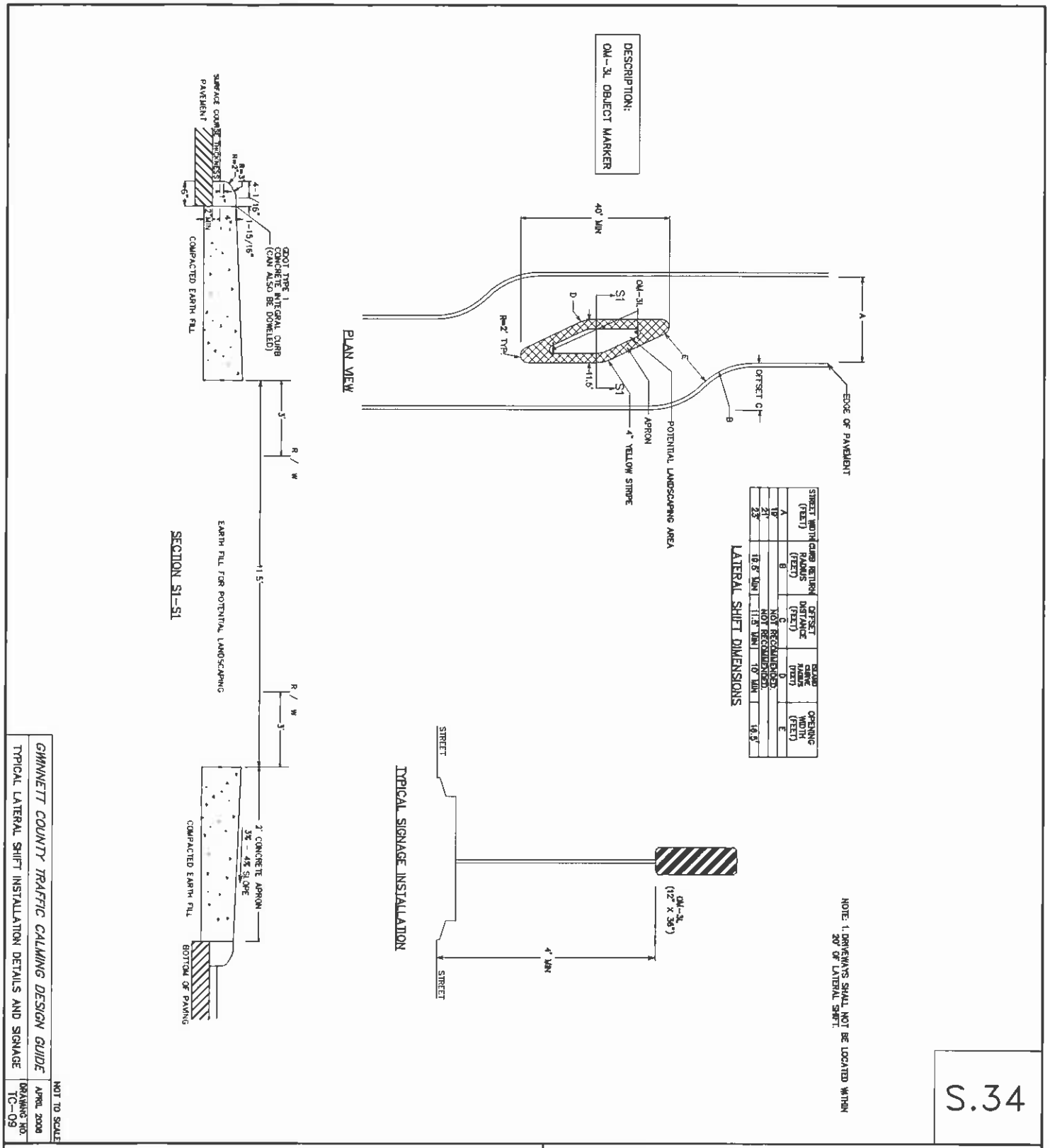

STREET WIDTH (FEET)	CURB RETURN RADIUS (FEET)	OFFSET DISTANCE (FEET)	ISLAND CURVE RADIUS (FEET)	OPENING WIDTH (FEET)
A	B	C	D	E
19'	NOT RECOMMENDED			
21'	NOT RECOMMENDED			
23'	16.5' MIN	11.5' MIN	10' MIN	16.5'

Martenson & Eisele, Inc.
1377 Midway Road
Menasha, WI 54952
www.martenson-eisele.com
info@martenson-eisele.com
920.731.0381 1.800.236.0381
Planning
Environmental
Surveying
Engineering
Architecture

TYPICAL LATERAL SHIFT INSTALLATION DETAILS AND SIGNAGE

FIELD BK	PAGE		DRAWN BY EAE	CHECKED	APPROVED	DRAWING NO
SCALE N.T.S.	DATE 11/20/07	NO	DATE	REVISION		
COMPUTER FILE TrafficCalming09CAD.dwg						

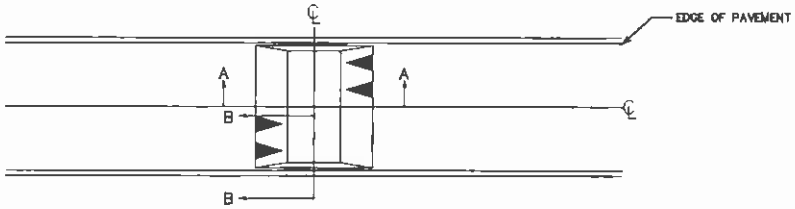

PLAN VIEW

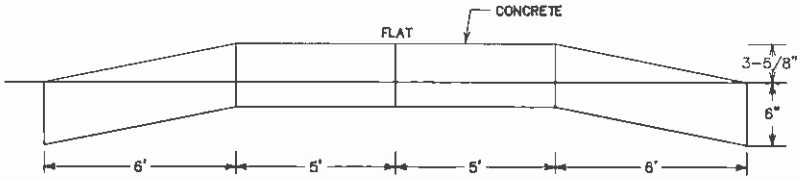

SECTION A-A

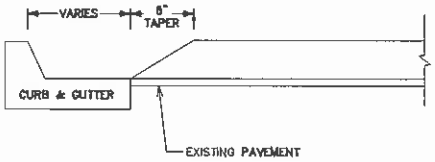

SECTION B-B (WITH CURB)

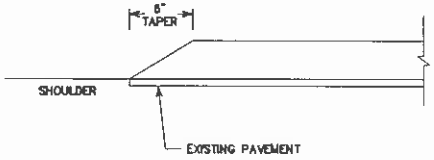

SECTION B-B (WITHOUT CURB)

NOTE: 1 DRIVEWAYS SHALL NOT BE LOCATED WITHIN 20' OF SPEED HUMPS.

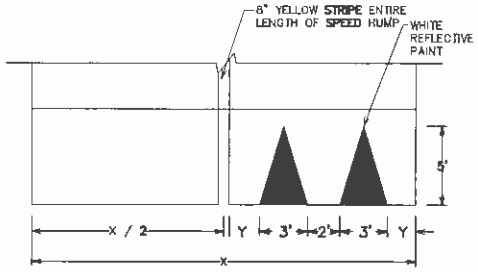

PAVEMENT MARKINGS DETAILS (1)
(FOR ROADS WITHOUT CENTERLINE)

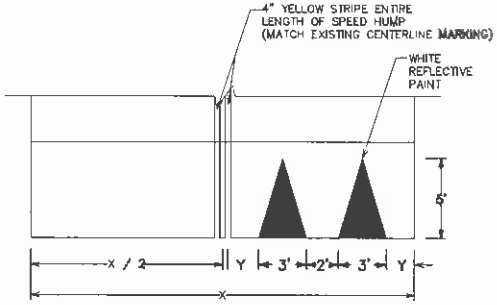

PAVEMENT MARKINGS DETAILS (2)
(FOR ROADS WITH CENTERLINE)

GWINNETT COUNTY TRAFFIC CALMING DESIGN GUIDE	NOT TO SCALE APRIL 2006
SPEED HUMP INSTALLATION DETAILS	DRAWING NO. TC-10

S.35

SPEED HUMP INSTALLATION DETAILS

FIELD BK	PAGE	DRAWN BY	CHECKED	APPROVED	DRAWING NO
SCALE N.T.S.	DATE 11/20/07	DATE 4/21/09	REVISION		
COMPUTER FILE					

Martenson & Eisele, Inc.
1377 Midway Road
Menasha, WI 54952
www.martenson-eisele.com
info@martenson-eisele.com
920.731.0381 1.800.236.0381
Planning
Environmental
Surveying
Engineering
Architecture

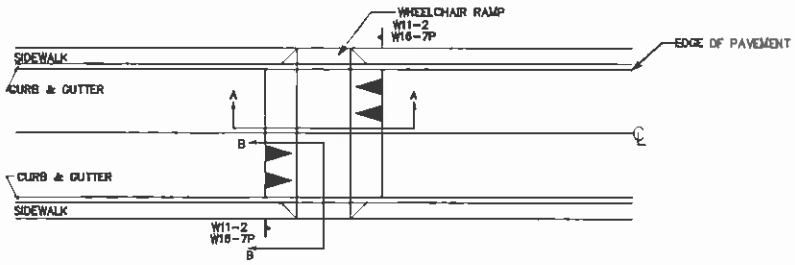

PLAN VIEW

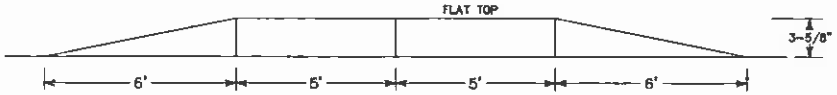

SECTION A-A

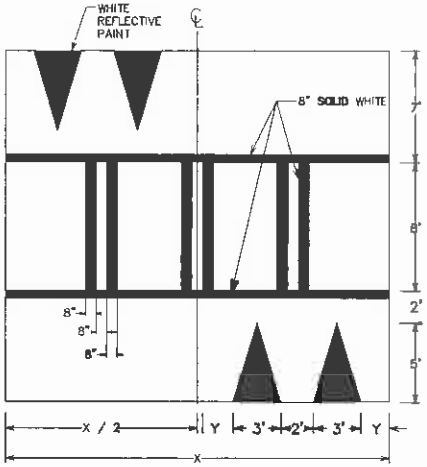

RAISED CROSSWALK MARKING DETAIL

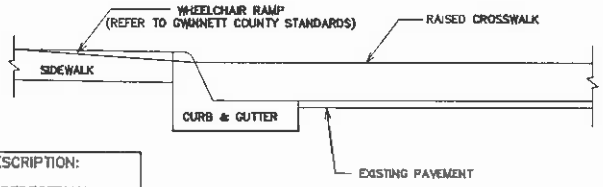

SECTION B-B (WITH CURB)

SIGN DESCRIPTION:

W11-2 PEDESTRIAN
W16-7PDIAGONAL ARROW

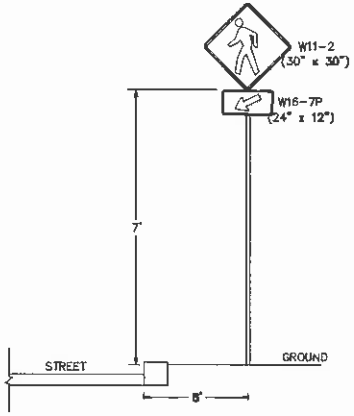

TYPICAL SIGNAGE INSTALLATION

NOTES: 1 DROP INLETS ARE REQUIRED ON THE UPHILL SIDE OF THE RAISED CROSSWALK FOR DRAINAGE PURPOSES.

2 DRIVEWAYS SHALL NOT BE LOCATED WITHIN 20' OF RAISED CROSSWALK.

GWINNETT COUNTY TRAFFIC CALMING DESIGN GUIDE	NOT TO SCALE APRIL 2006
RAISED CROSSWALK INSTALLATION DETAILS	DRAWING NO. TC-11

S.36

RAISED CROSSWALK INSTALLATION DETAILS

FIELD BK	PAGE	DRAWN BY	CHECKED	APPROVED	DRAWING NO
SCALE NTS	DATE 11/2007	NO	DATE	REVISION	
COMPUTER FILE					

Martenson & Eisele, Inc.
1377 Midway Road
Menasha, WI 54952
www.martenson-eisele.com
info@martenson-eisele.com
920.731.0381 1.800.236.0381
Planning
Environmental
Surveying
Engineering
Architecture

S.37

SPACING OF TRAFFIC CALMING DEVICES

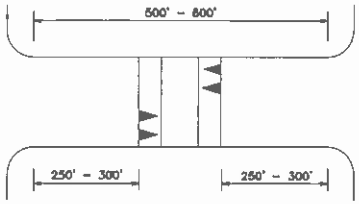

ONE DEVICE – SINGLE SHORT LENGTH TANGENT

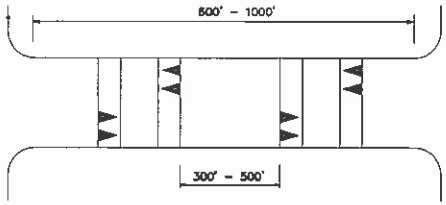

TWO DEVICES – SINGLE MODERATE LENGTH TANGENT

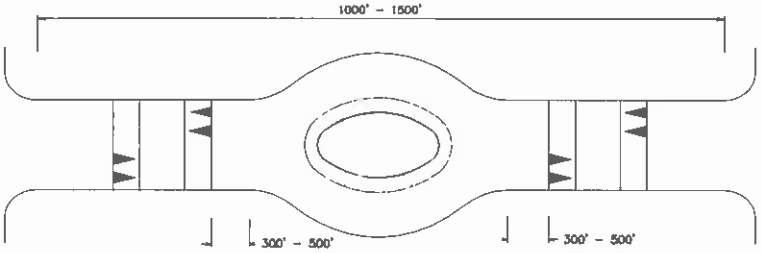

THREE DEVICES – SINGLE LONG LENGTH TANGENT

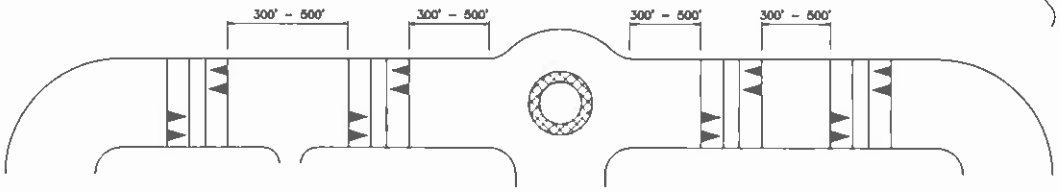

MULTIPLE DEVICES – LENGTHY CONTINUOUS SEGMENTS / MULTI-BLOCK SEGMENTS WITH INTERSECTING STREETS
(SEE NOTE 1)

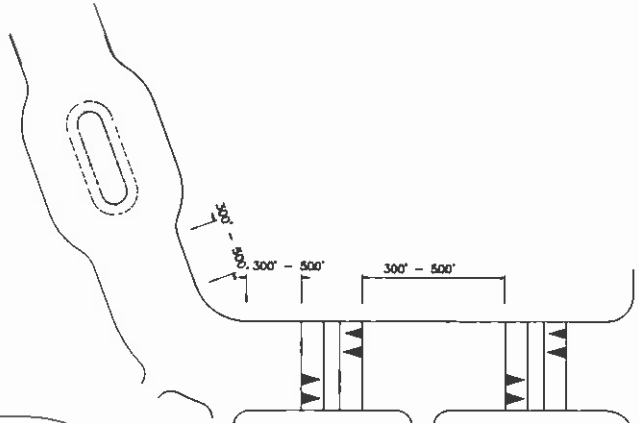

MULTIPLE DEVICES – LENGTHY CONTINUOUS SEGMENTS AND MULTI-BLOCK SEGMENTS
(SEE NOTE 1)

NOTES: 1. FOR MULTI-BLOCK SEGMENTS, AT LEAST ONE DEVICE PER BLOCK. FOLLOW SPACING CONCEPTS ABOVE WITHIN EACH COMPONENT BLOCK. MAXIMUM AND MINIMUM SEPARATION AND "FIRST DEVICE" CRITERIA MAY BE RELAXED SOMEWHAT TO CONFORM TO PARTICULART SITE CONDITIONS.

NOT TO SCALE	
GWINNETT COUNTY TRAFFIC CALMING DESIGN GUIDE	APRIL 2006
SPACING OF TRAFFIC CALMING DEVICES	DRAWING NO. TC-12

FIELD BK	PAGE		DRAWN BY EFE	CHECKED	APPROVED	DRAWING NO
SCALE N.T.S.	DATE 11/20/07	NO	DATE	REVISION		
COMPUTER FILE TCPSCalmingDesignGuide.dwg						

Martenson & Eisele, Inc.
1377 Midway Road
Menasha, WI 54952
www.martenson-eisele.com
info@martenson-eisele.com
920.731.0381 1.800.236.0381
Planning
Environmental
Surveying
Engineering
Architecture

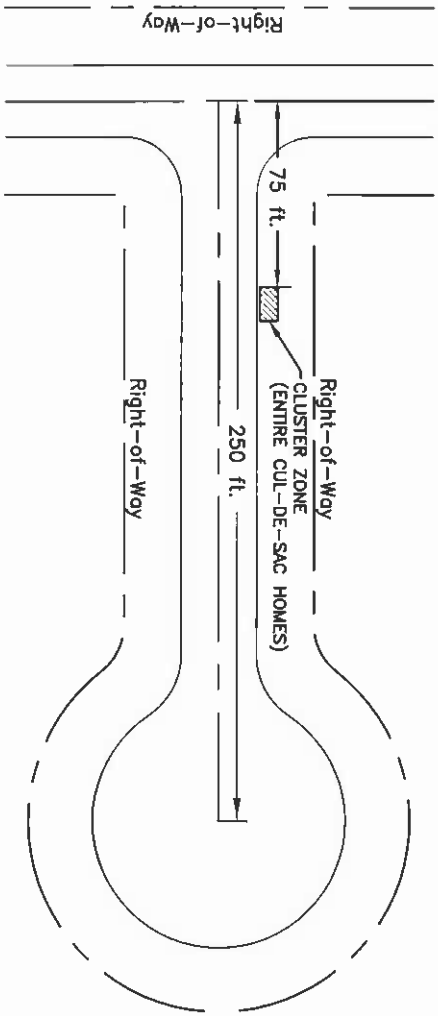

Cul-de-Sac < 250 ft.

Figure 1

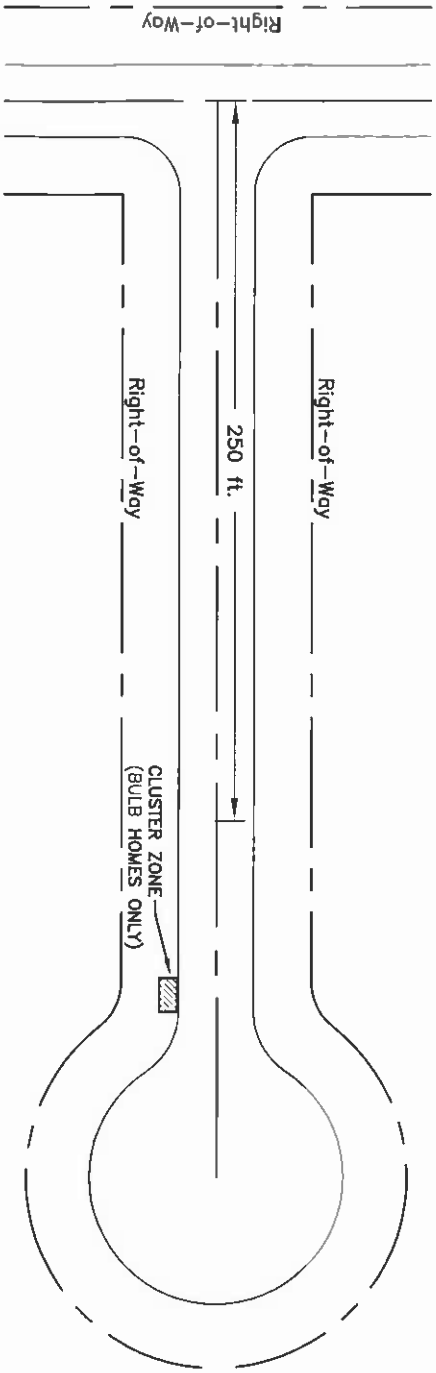

Cul-de-Sac > 250 ft.

Figure 2

S.38

Martenson & Eisele, Inc.

1377 Midway Road
Menasha, WI 54952
www.martenson-eisele.com
info@martenson-eisele.com
920.731.0381 1.800.236.0381

Planning
Environmental
Surveying
Engineering
Architecture

CLUSTER MAIL BOXES

FIELD BK	PAGE		DRAWN BY	CHECKED	APPROVED	DRAWING NO
			EAE			
SCALE	DATE	NO	DATE	REVISION		
N.T.S.	12/15/08					
COMPUTER FILE						
CLUSTER MAIL BOXES.dwg						